SONY

4-549-307-**11**(1)

Solid-State Memory Camcorder

PXW-X200

Operating Instructions

Before operating the unit, please read this manual thoroughly and retain it for future reference.

© 2014 Sony Corporation

Table of Contents

Overview

Part Identification **7**
Camcorder 7
IR Remote Commander (Supplied) 12
On-Screen Indications **13**
Direct Menu Operation 15

Preparations

Power Supply **16**
Using a Battery Pack 16
Using AC Power (DC IN Power) 17
Turning the Power On/Off 17
Setting the Clock **18**
Adjusting the LCD Monitor and Viewfinder **18**
Adjusting the LCD Monitor 18
Adjusting the Viewfinder 18
Using the IR Remote Commander **19**
Using SxS Memory Cards **20**
About SxS Memory Cards 20
Inserting/Removing an SxS Memory Card 21
Switching Between SxS Memory Cards 21
Formatting an SxS Memory Card 21
Checking the Remaining Time Available for Recording 22
Restoring an SxS Memory Card 22
Using Other Media **23**
XQD Memory Cards 23
SD Cards 23
USB Flash Drives 24

Recording

Basic Operation Procedure 26

Changing Basic Settings 28

Video Formats 28
ND Filter 29
White Balance 29
Markers/Zebra Patterns 30
Gain 30
Electronic Shutter 31
Iris 31
Zoom 32
Focus 32
Steady Shot 33
Flickers 33
Time Data 34

Recording Audio Signals 34

Using the Built-in Stereo Microphones 34
Using External Inputs 34
Using an External Microphone 34
Adjusting the Audio Recording Levels 35
Monitoring the Audio 35

Useful Functions 36

Color Bars/Reference Tone 36
Shot Marks 36
OK/NG/KP Flags (UDF and exFAT) 36
OK Mark (FAT HD Mode Only) 36
Rec Review 37
Assignable Buttons 37
Interval Recording 37
Frame Recording 38
Clip Continuous Recording (UDF and exFAT) 39
Picture Cache Recording: Retroactively Record 39
Slow & Quick Motion 40
Freeze Mix: Image Alignment 41
Automatic Adjustment of Flange Focal Length 41
Picture Profiles 42
Deleting Clips 50
Storing/Retrieving the Setting Data 50
Planning Metadata 51

Proxy Recording 54

Usable SD Cards 54
Formatting an SD Card 54
Checking the Remaining Time 54
Performing Proxy Recording 54
Changing the Proxy Recording Setting 55

About the Recorded File 55
Storage Destination of the Recorded File 55
About the File Name 55

Connecting to Other Device via Wireless LAN 55

Attaching the IFU-WLM3 56
Connecting with the Wireless LAN Access Point Mode 56
Connecting with the Wireless LAN Station Mode 58

Uploading a File 59

Preparations 59
Selecting the File and Uploading 59
Using the Wi-Fi Remote Commander 61

About the Web Menu 62

Format Settings 63
Wireless LAN Settings (Station Settings) 64
Upload Settings 65
Checking the File Transferring (Job List) 66
Error/Warning Indicator 67

Playback

Thumbnail Screens 68

Configuration of the Thumbnail Screen 68
Changing the Type of Thumbnail Screen 69

Playing Clips 70

Playing the Selected and Subsequent Clips in Sequence 70
Monitoring Audio 71
Cueing Up 71
Adding Shot Marks During Playback (UDF, exFAT, and FAT HD Mode) 71

Clip Operations 71

Clip Operation Menus 71
Basic Operations of the Clip Operation Menus 72
Displaying the Detailed Information of a Clip 73
Adding/Deleting a Flag (UDF and exFAT) 74
Adding/Deleting the OK Mark (FAT HD Mode Only) 74
Copying Clips 74
Deleting Clips 75
Displaying the EXPAND CLIP Screen 75
Displaying the SHOT MARK Screen (UDF, exFAT, and FAT HD Mode) 76
Adding/Deleting Shot Marks (UDF, exFAT, and FAT HD Mode) 77

Changing the Index Frame (UDF, exFAT, and FAT HD Mode) 77
Dividing a Clip (FAT HD Mode Only) 77

Showing the Status Screens 78

Camera Status Screen 78
Audio Status Screen 79
Video Status Screen 79
Button/Remote Status Screen 80
Battery/Media Status Screen 80

Menu Configuration and Detailed Settings

Overview of the Setup Menus 81

Setup Menu Layers 81

Basic Menu Operations 82

Setup Menu List 84

CAMERA SET Menu 84
AUDIO SET Menu 91
VIDEO SET Menu 93
LCD/VF SET Menu 96
TC/UB SET Menu 99
OTHERS Menu 101

Connecting External Devices

Connecting External Monitors and Recording Devices 111

Operating Clips With a Computer 112

Connecting via i.LINK (FAT only) 114

Recording the Camcorder Picture on an External Device 114
Nonlinear Editing 115
Recording External Input Signals 115

External Synchronization 116

Appendices

Important Notes on Operation 119

Video Format (Format) 122

UDF HD Mode 122
UDF SD Mode 122
exFAT HD Mode 123
exFAT SD Mode 123
FAT HD Mode 124
FAT SD Mode 124

Formats and Limitations of Outputs 125

Video Formats and Output Signals 125
Limitations of Inputs/Outputs 133
Video Format and the Recording Function 134

Backup Battery Replacement 138

Troubleshooting 139

Power 139
Recording/Playback 139
External Devices 140
When Making a Wireless LAN Connection 140

Error/Warning Indications 141

Error Indications 141
Warning Indications 141

Licenses 144

MPEG-4 AVC Patent Portfolio License 144
MPEG-2 Video Patent Portfolio License 144
Bitmap Fonts 144
END USER LICENSE AGREEMENT 144
About OpenSSL 149

Specifications 151

General 151
Lens 154
Camera Section 155
Inputs/Outputs 155
Monitoring 156
Built-in Microphone 156
Media 156
Supplied Accessories 156
Optional Accessories 157

Index 158

Overview

Part Identification

For functions and usage, see the pages in parentheses.

Camcorder

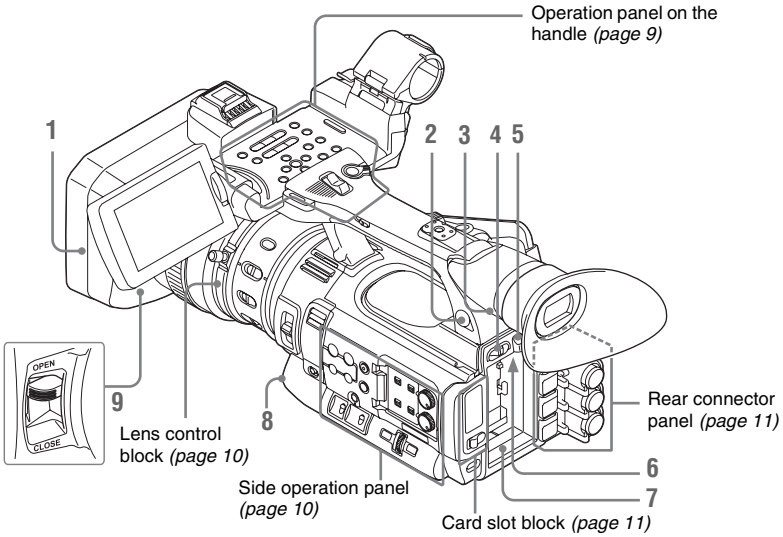

1. **Lens hood**

   Attach

   Insert the hood by aligning the mark on the camcorder and hood then turn the hood clockwise (in the opposite direction of arrow ② in the illustration below), with the front of the camcorder facing forward, until the hood is locked.

   Detach

   ① Press the PUSH (lens food removing) button, ② turn the hood in the direction of the arrow, ③ then withdraw it.

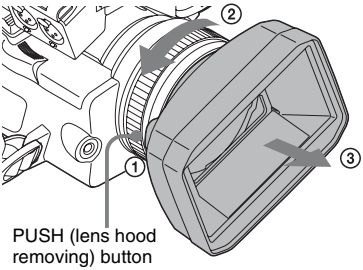

2. **Headphone connector (stereo mini jack)** ***(page 35)***
3. **Rear remote sensor**
4. **Power switch** ***(page 17)***
5. **BATT RELEASE button** ***(page 16)***
6. **DC IN connector** ***(page 17)***
7. **Battery pack receptacle** ***(page 16)***
8. **WHITE BAL (automatic white balance adjustment) button** ***(page 30)***
9. **Lens cap open/close lever** ***(page 26)***

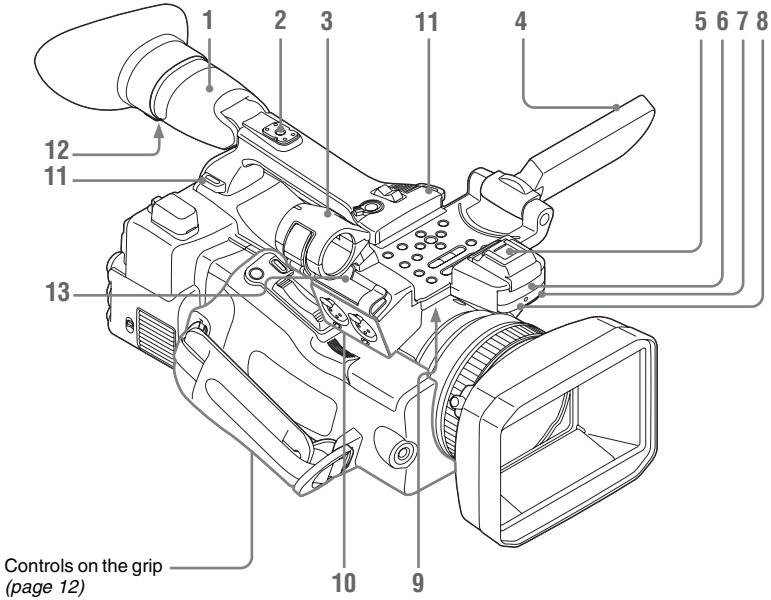

1. **Viewfinder** ***(page 18)***

   How to attach the EVF large eyecup

   Stretch the EVF large eyecup for attaching to the viewfinder and insert it aligning with the horizontal groove of the eyecup.

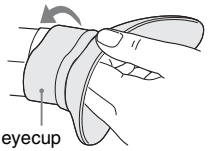

2. **Rear accessory shoe** ***(page 9)***
3. **External microphone holder** ***(page 34)***
4. **LCD (Liquid Crystal Display) monitor** ***(page 18)***
5. **Front accessory shoe**

   The cover is attached. The front accessory shoe will be compatible with the multi interface function in future upgrades.
6. **Built-in stereo microphone** ***(page 34)***
7. **REC/TALLY lamp**
8. **Front IR remote control receptor**
9. **Built-in speaker** ***(page 71)***
10. **AUDIO IN CH-1/CH-2 connectors (XLR) and input selection (LINE/MIC/MIC+48V) switches** ***(page 34)***
11. **Hooks for the shoulder strap**

    Attach the supplied shoulder strap as shown below.

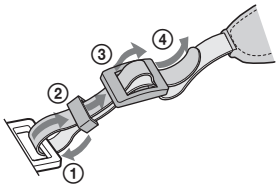

12. **Eyepiece focusing knob** ***(page 19)***
13. **Microphone cable holder** ***(page 34)***

To mount the accessory shoe

Mount the accessory shoe on the accessory shoe mount as illustrated.

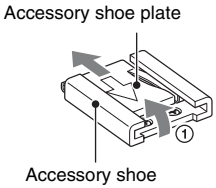

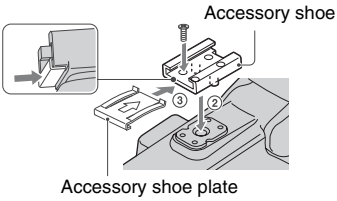

1. Lift the edge of the accessory shoe plate and pull it in the direction opposite to that of the arrow on the accessory shoe plate and remove it from the accessory shoe.
2. Place the accessory shoe so its protrusions match recesses of the accessory shoe mount, then fix it to the mount with four screws.
3. Insert the accessory shoe plate in the direction of the arrow on the plate surface until the end of the plate engages the end of the shoe.

To remove the accessory shoe

Remove the shoe plate in the same way as step 1 of "To mount the accessory shoe." Loosen the 4 screws and remove the accessory shoe from the accessory shoe mount.

Operation panel on the handle

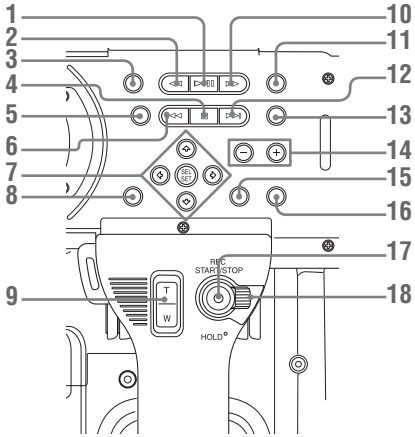

1. **PLAY/PAUSE button** ***(page 70)***
2. **F REV (fast reverse) button** ***(page 71)***
3. **THUMBNAIL button** ***(page 68)***
4. **STOP/CAM button** ***(page 68)***
5. **STATUS (status display on/off) button** ***(page 78)***
6. **PREV (previous) button**
7. **Up/down/left/right buttons, SEL/SET (select/set) button** ***(page 82)***
8. **MENU (menu display on/off) button** ***(page 82)***
9. **On-handle ZOOM button** ***(page 32)***
10. **F FWD (fast forward) button** ***(page 71)***
11. **LCD BRIGHT (LCD brightness adjustment) button** ***(page 18)***
12. **NEXT (clip directional jump) button** ***(page 71)***
13. **DISPLAY button** ***(page 13)***
14. **VOLUME (monitor volume) buttons** ***(page 35)***
15. **CANCEL button**
16. **DURATION/TC/U-BIT (time data selection) button** ***(page 34)***
17. **REC START/STOP button** ***(page 27)***
18. **REC HOLD lever** ***(page 27)***

Lens control block

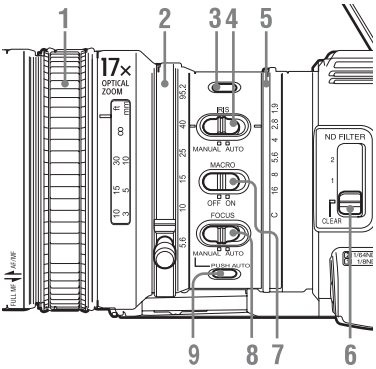

1. **Focus ring** ***(page 32)***
2. **Zoom ring** ***(page 32)***
3. **STEADY SHOT button** ***(page 33)***
4. **IRIS switch** ***(page 31)***
5. **Iris ring** ***(page 31)***
6. **ND FILTER select switch** ***(page 29)***
7. **MACRO switch** ***(page 33)***
8. **FOCUS switch** ***(page 32)***
9. **PUSH AUTO (momentary auto focus) button** ***(page 33)***

Side operation panel

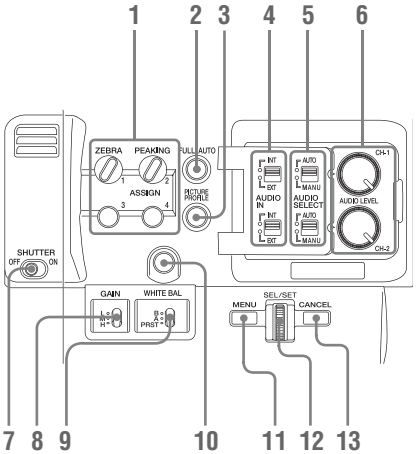

1. **ASSIGN (assignable) 1/2/3/4 buttons** ***(page 37)***
   "Zebra" is set to ASSIGN 1 and "Peaking" is set to ASSIGN 2 by default.
2. **FULL AUTO button and indicator** ***(page 26)***
3. **PICTURE PROFILE button** ***(page 42)***
4. **AUDIO IN (audio input selection) switches** ***(page 34)***
5. **AUDIO SELECT (audio level control mode selection) switches** ***(page 35)***
6. **AUDIO LEVEL CH-1/CH-2 knobs** ***(page 35)***
7. **SHUTTER switch** ***(page 31)***
8. **GAIN switch** ***(page 30)***
9. **WHITE BAL (white balance memory) switch** ***(page 29)***
10. **ASSIGN (assignable) 5 button** ***(page 37)***
11. **MENU (menu display on/off) button** ***(page 82)***
12. **SEL/SET dial (jog dial)** ***(page 82)***
    It functions accordingly when you turn it up or down, or you push it horizontally.
    It is called the "jog dial" in the subsequent operating instructions.
13. **CANCEL button**

Card slot block

The SxS memory card slots and EJECT buttons are located behind the cover.

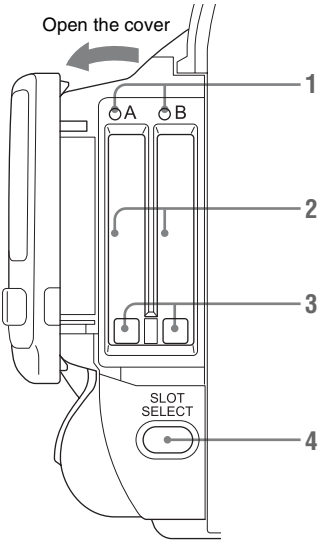

1. **ACCESS lamps** ***(page 21)***
2. **SxS memory card slots** ***(page 21)***
3. **EJECT (SxS memory card eject) buttons** ***(page 21)***
4. **SLOT SELECT (SxS memory card select) button** ***(page 21)***

Rear connector panel

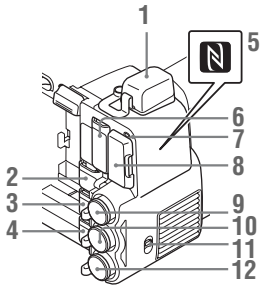

1. **External device connector** ***(page 24, 56)***
2. **PC connector** ***(page 112)***
3. **i.LINK (HDV/DV) connector (4-pin, S400 conforming to IEEE1394)** ***(page 112)***
4. **A/V OUT (audio/video multi output) connector** ***(page 112)***
5. **N mark**
   - Hold a NFC-compatible smartphone near this mark when making wireless connection between the camcorder and smartphone. For details, refer to the operating instructions of the smartphone.
   - NFC (Near Field Communication) is the international standard for the short range radio communication technique.
6. **HDMI OUT connector** ***(page 111)***
7. **SD card ACCESS lamp**
   Lights in red while accessing the loaded SD card.
8. **SD card slot for proxy recording** ***(page 54)***
9. **SDI OUT (serial digital output) connector (BNC type)** ***(page 111)***
10. **TC IN (timecode input)/TC OUT (timecode output) connector (BNC type)** ***(page 117)***
11. **IN/OUT (input/output change) switch** ***(page 118)***
    Set this to IN to select TC IN and GENLOCK IN, and set this to OUT to select TC OUT and VIDEO OUT.
12. **GENLOCK IN/VIDEO OUT (analog video output) connector (BNC type)** ***(page 111, 117)***

Controls on the grip

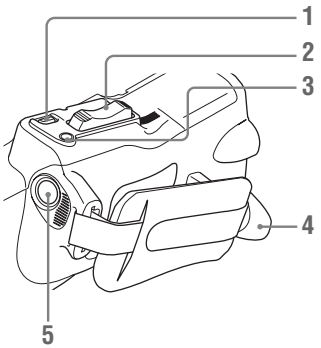

1. **REC REVIEW button** ***(page 27)***
2. **Power zoom lever** ***(page 32)***
3. **FOCUS MAG button** ***(page 32)***
4. **LENS REMOTE (lens remote controller) connector** ***(page 32)***
5. **REC START (start/stop recording) button** ***(page 27)***

Note

There is a GPS mark on the camcorder. The GPS function will be compatible in future upgrades.

Bottom

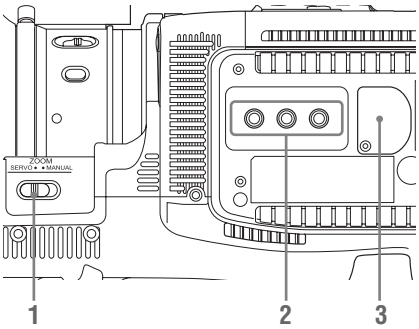

1. **ZOOM (zoom mode switching) switch** ***(page 32)***
2. **Tripod receptacles**

   Note

   Check that the size of the hole matches the screw of the tripod. If they do not match, the camcorder cannot be attached to the tripod securely, and this may lead to the physical injury of the camera operator.
3. **Backup battery holder** ***(page 138)***

IR Remote Commander (Supplied)

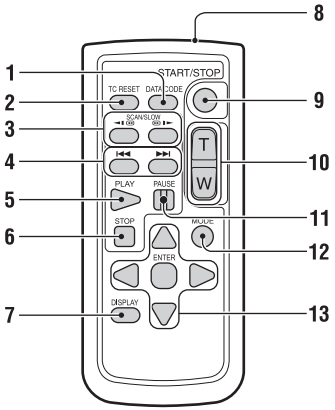

1. **DATA CODE button**
   This button does not work on the camcorder.
2. **TC RESET (timecode reset) button**
3. **SCAN/SLOW (reverse high speed playback/high speed playback) buttons**
4. **⏮ ⏭ (PREV/NEXT(clip reverse/ forward direction jump)) buttons**
5. **PLAY button**
6. **STOP button**
7. **DISPLAY button**
8. **Transmitter**
9. **START/STOP (recording start/stop) button**
10. **Power zoom lever**
11. **PAUSE button**
12. **MODE button**
    This button does not work on the camcorder.
13. **◀/▶/▲/▼/ENTER buttons**

On-Screen Indications

While recording (or standing by to record), pressing the DISPLAY button displays the statuses and settings of this unit on the LCD monitor/viewfinder screen.

Remarks

M: The indication of the items named with this suffix can be independently turned on/off with "Display On/Off" of the LCD/VF SET menu *(page 97)*.

A: The indication of items named with this suffix can be turned on/off using the assignable buttons to which the corresponding on/off functions have been assigned *(page 37)*.

D: The settings of the items named with this suffix can be changed using the Direct menu on the screen *(page 15)*.

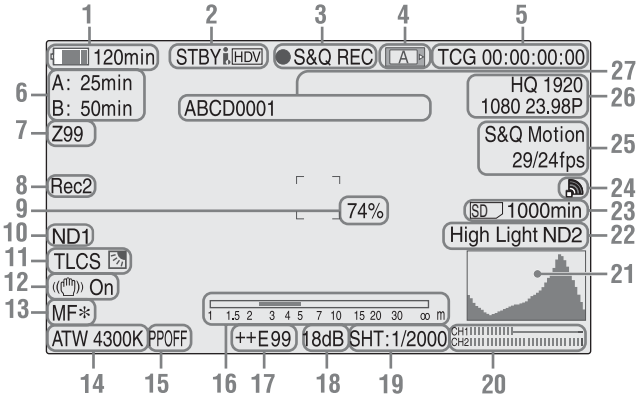

1. **Battery remaining/DC IN voltage indication** M ***(page 16)***

2. **i.LINK status indication** ***(page 114)***
   Only when an external device is connected to the i.LINK connector, the status of the device is displayed.

3. **Special recording/operation status indication**

●REC	Recording in progress
STBY	Standby for recording
CONT	Standby for recording When using Clip Continuous Recording, indicates that a clip is being continued. "CONT" flashing: When using Clip Continuous Recording, indicates that there is no continuing clip.
●S&Q REC	Slow & Quick Motion recording in progress
S&Q STBY	Standby for Slow & Quick Motion recording
●INT REC	Interval Recording in progress
INT STBY	Standby for Interval Recording
●FRM REC	Frame Recording in progress
FRM STBY	Standby for Frame Recording
●CACHE	● in green: Standby for Picture Cache Recording
	● in red: Picture Cache Recording in progress

4. **Media status indication**

A	Memory card in slot A is active.
B	Memory card in slot B is active.

5. **Time data indication** M ***(page 34)***

6. **Media remaining indication** M ***(page 22)***

7. **Zoom position indication** M ***(page 32)***

8. Synchronous recording indication M *(page 111)*
"Rec2" appears when recording while "SDI Rec Control" of the VIDEO SET menu is set to "HD SDI Remote I/F."
"Rec2-P" appears when recording synchronously while "Proxy" of the CAMERA SET menu is set to "On."

9. Brightness level indication M A

10. ND FILTER position M
Displays the selected ND filter number *(page 29)*.

11. TLCS mode indication M D *(page 89)*

	Backlight mode
STD	Standard mode
	Spotlight mode

12. Steady Shot indication M D *(page 33)*

13. Focus mode indication M (D **only in MF mode)** *(page 32)*

14. White balance mode and color temperature indications M D *(page 29)*

15. Picture profile indication M D *(page 42)*

16. Depth-of-Field bar indication M A

17. Iris position indication M D *(page 31)*

18. Gain indication M D *(page 30)*

19. Shutter mode/shutter speed indication M D *(page 31)*

20. Audio level meters M

21. Histogram indication M A

22. Video level cautioning indication M **/Recommended ND filter number indication/Clip uploading status indication**
The clip uploading status indication is displayed when connected via wireless LAN. The number of remaining clips for uploading and uploading rate are displayed.

23. SD card remaining space indication
The remaining space of the SD card is displayed while the SD card is inserted in the card slot of the camcorder *(page 54)*.

24. Wi-Fi status indication
The Wi-Fi settings and reception status are displayed as icons.

Conditions			Icon
OTHERS menu > "Network" > "Wi-Fi&Proxy/USB"	**OTHERS menu > "Network" > "Wi-Fi Func. Mode"**	**Wi-Fi operating status**	
"Off" or "USB A"	–	–	No display
"Wi-Fi&Proxy"	"Off"	–	No display
	"Access Point"	Preparing	Flashing
		Connecting	AP
		Cannot be connected 1)	No display
	"Station"	Preparing	Flashing
		Connecting	Intensity 1 Intensity 2 Intensity 3 Intensity 4 The icon changes depending on the radio wave intensity.
		Disconnecting	No radio wave
		Cannot be connected 1)	No display

1) When the USB wireless LAN module is not connected, or the SSID is not set.

25. **Special recording mode indication M (D only in Slow & Quick Motion Standby)**

Frame Rec	Frame Rec mode
Interval Rec	Interval Rec mode
S&Q Motion xx/xx fps	Slow & Quick Motion mode

26. **Video format indication M *(page 28)***
27. **Clip name indication M *(page 27)***

Direct Menu Operation

The settings of the items named with a suffix D can be changed using the Direct menu on the screen.
Select "All," "Part," or "Off" for Direct Menu using "Direct Menu" *(page 104)* of the OTHERS menu.

Note

When the indicator of the FULL AUTO button is lit, the Direct Menu operation is disabled for the functions that are forcibly set to the automatic mode in Full Auto mode *(page 26)*.

1. **When the camcorder's status or settings are displayed on the screen, press the SEL/SET button *(page 9)* or the jog dial *(page 10)*.**

   If "Direct Menu" is set to "All" or "Part," the cursor is displayed on one of the items for which the Direct menu operation is permitted.

2. **Press the up/down/left/right buttons *(page 9)* or rotate the jog dial to set the cursor to the item to be operated, then press the SEL/SET button or the jog dial.**

   The Direct menu of the selected items appears.

3. **Press the up/down/left/right buttons or rotate the jog dial to select a setting, then press the SEL/SET button or the jog dial.**

   The menu disappears, and the new setting is displayed.

Power Supply

You can use a battery pack or AC power via an AC adaptor.
For safety, use only the Sony battery packs and AC adaptor listed below:

Lithium-ion Battery Pack
BP-U30
BP-U60
BP-U60T
BP-U90

Battery Charger/AC Adaptor
BC-U1
BC-U2

The life expectancy of the AC adapter and the electrolytic capacitor is about 5 years under normal operating temperatures and normal usage (8 hours per day; 25 days per month). If usage exceeds the above normal usage frequency, the life expectancy may be reduced correspondingly.

The battery terminal of this unit (the connector for battery packs and AC adaptors) is a consumable part.
Power may not be supplied to the unit properly if the pins of the battery terminal are bent or deformed by shock or vibrations, or if they become corroded due to prolonged outdoor use.
Periodic inspections are recommended to keep the unit working properly and to prolong its usable lifetime.
Contact a Sony service or sales representative for more information about inspections.

WARNING

Batteries shall not be exposed to excessive heat such as sunshine, fire or the like.

CAUTION

Danger of explosion if battery is incorrectly replaced. Replace only with the same or equivalent type recommended by the manufacturer.
When you dispose of the battery, you must obey the law in the relative area or country.

Note

The AC adaptor cannot be connected to the camcorder while the battery pack is inserted.

Using a Battery Pack

Fully insert the battery pack into the battery pack receptacle *(page 7)*, then slide it down to lock it. To remove the battery pack, press and hold the BATT RELEASE button *(page 7)*, slide the battery pack upward to unlock it, then pull it out.

Notes

- Before use, charge the battery pack with the supplied BC-U1 or BC-U2 Battery Charger.
- A warm battery pack immediately after use may not be able to be fully recharged.
- The high-capacity BP-U90 Battery Pack is large, and protrudes from the camcorder when attached. When using the camcorder with the BP-U90 attached for extended recording periods, Sony recommends attaching the camcorder to a tripod for convenience.

Checking battery charge remaining

When recording or playback is in progress on the battery pack, an icon to show the current battery charge level and usage time remaining are displayed on the LCD monitor/viewfinder screen *(page 13)*.

Icon	Remaining
	100% to 91%
	90% to 71%
	70% to 51%
	50% to 31%
	30% to 11%
	10% to 0%

The camcorder indicates the remaining usage time in minutes by calculating the available time with the battery pack if operation is continued at the current rate of power consumption.

If the battery charge remaining becomes low

If the battery charge remaining decreases to a certain level during operation (Low BATT status), a low-battery message, flashing of the tally lamps, and a beep sound will warn you.
If the remaining further decreases to a level at which operation cannot be continued (BATT Empty status), a battery-empty message appears. Replace the battery pack with one that is fully charged.

To change the message levels

The Low BATT level is set to 10% of full charge, and the BATT Empty level is set to 3% of full charge at the factory. These settings can be changed with "Battery Alarm" *(page 104)* of the OTHERS menu.

Using AC Power (DC IN Power)

Connection example: when connecting BC-U1

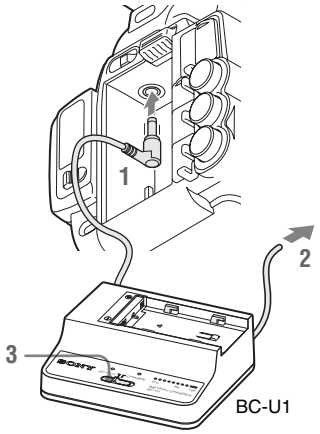

1 Connect the DC power output cable of the BC-U1 to the DC IN connector of the camcorder.

2 Connect the power cord of the BC-U1 to an AC power source.

3 Set the mode switch of the BC-U1 to the DC OUT position.

Turning the Power On/Off

To turn the power on, set the power switch *(page 7)* to the ON position (the I position). To turn the power off, set the power switch to the OFF position (the ⏻ position).

Notes

- This camcorder uses a little standby power even when the power switch is set to OFF. Remove the battery pack if the camcorder will not be used for a prolonged period.
- When removing the battery pack or the DC IN power, be sure to first set the power switch to the OFF position. Removing the battery pack or the DC IN power while the camcorder is on may cause damage to the camcorder or the SxS memory card.

Setting the Clock

When you turn the camcorder on for the first time after purchasing or replacing the backup battery *(page 138)*, the Initial Setting display appears on the LCD monitor/viewfinder screen.
Set the date and time of the built-in clock, using this display.

Time Zone
The value shows the time difference from UTC (Coordinated Universal Time).
Change the setting if needed.

Setting the time and date

Press the up/down/left/right buttons *(page 9)* or turn the jog dial *(page 10)* to move the cursor, then press the SEL/SET button or the jog dial to set each menu item. When you press the SEL/SET button or the jog dial when the cursor is on "Finish," the Initial Setting display disappears and the clock setting is completed.

After the Initial Setting display disappears, "Time Zone" *(page 101)* and "Clock Set" *(page 101)* of the OTHERS menu can be used to set "Time Zone" and "Date/Time."

Notes

- If the clock setting is cleared because of exhaustion of the backup battery while no operation power was being supplied (no battery pack and no DC IN connection), the Initial Setting display will be displayed when you turn the camcorder on at the next opportunity.
- While the Initial Setting display is shown, no other operation except turning the power off is permitted until you finish the setting for this display.

Adjusting the LCD Monitor and Viewfinder

Adjusting the LCD Monitor

The LCD monitor turns on when it is opened and turns off when it is returned to the park position.

Adjusting the angle

It can be rotated as much as 90 degrees in the direction facing the subject and as much as 180 degrees in the opposite direction.
When you rotate it 90 degrees toward the subject, the image on the monitor becomes upside down, indicating the mirror image of the subject. The display direction of the textual information is converted to the readable direction.

Adjusting the backlight

Press the LCD BRIGHT button *(page 9)* to adjust the brightness of the backlight.

Adjusting the color, contrast, and brightness

These adjustments can be made using "LCD" *(page 96)* of the LCD/VF SET menu. These adjustments of the LCD monitor have no effect on pictures being recorded.

Adjusting the Viewfinder

If the picture on the LCD monitor is hard to view under bright ambient light, you can use the viewfinder to check the picture.

Caution

Do not leave the camcorder with the eyepiece of the viewfinder facing the sun. Direct sunlight can enter through the eyepiece, be focused in the viewfinder, and cause fire.

Hereafter the viewfinder is referred to as "EVF" (abbreviation of Electronic Viewfinder).

Turning the EVF on/off

With the factory setting, the EVF is turned on when the LCD monitor is in its park position or is rotated to face the subject.
You can change the setting so that the EVF is always on regardless of the status in the LCD monitor, using "EVF" *(page 96)* of the LCD/VF SET menu. Change the "Power" setting from "Auto" to "On."

Adjusting the focus in the EVF

The eyepiece focusing (diopter compensation) knob *(page 8)* enables adjustment to match the eyesight of the operator, who can then view the image clearly through the eyepiece.

Adjusting the backlight

The brightness of the backlight for the EVF can be switched between High and Low.
Set "Backlight" in "EVF" *(page 96)* of the LCD/VF SET menu.

Switching between color and monochrome modes

For the EVF screen, color or monochrome display can be selected.
Set "Mode" in "EVF" *(page 96)* of the LCD/VF SET menu.
Select "B&W" if checking the subject and focusing are easier on the monochrome display.
If you assign "EVF Mode" to one of the assignable buttons *(page 37)*, you can switch between color and monochrome by pressing the button.

Adjusting the contrast and brightness

Use "EVF" *(page 96)* of the LCD/VF SET menu to make adjustments. Adjusting the brightness and other items has no effect on pictures being recorded.

Using the IR Remote Commander

Before use

Before you use the supplied IR Remote Commander for the first time, pull out the insulation sheet from the battery holder.

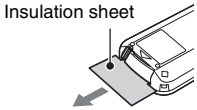

A CR2025 lithium battery is set in the holder at the factory.

Using the IR Remote Commander

For controlling the camcorder from the IR Remote Commander, activate the remote control function of the camcorder after turning the power on.
Activating/deactivating the remote control function can be achieved using the Setup menu.

To activate using the menu

Press the MENU button to set the camcorder to Menu mode, then set "IR Remote" *(page 104)* of the System menu to "On."

To activate using the assignable button

If you assign "IR Remote" to one of the assignable buttons *(page 37)*, you can switch between activating and deactivating the remote control function by pressing the button.

Notes

- Aim the IR Remote Commander towards the remote sensor to operate your camcorder.
- Point the remote sensor away from strong light sources such as direct sunlight or overhead lighting. Otherwise, the IR Remote Commander may not function properly.
- When you are operating with the IR Remote Commander supplied with your camcorder, your video device may also operate. In that case, select a commander mode other than DVD2 for your video device, or cover the sensor of your video device with black paper.
- The remote control function is deactivated automatically when the camcorder is turned off to prevent a malfunction. To use the remote control function, activate it when the camcorder is turned on.

Replacing the battery in the IR Remote Commander

Use a commercially available CR2025 lithium battery. Do not use any battery other than a CR2025.

1. While pressing on the tab, inset your fingernail into the slit to pull out the battery case.
2. Place a new battery with the + side facing up.
3. Insert the battery case back into the IR Remote Commander until it clicks.

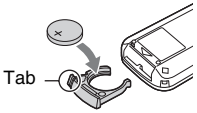

WARNING

- Battery may explode if mistreated.
  Do not recharge, disassemble, or dispose of in fire.
- Batteries shall not be exposed to excessive heat such as sunshine, fire or the like.

CAUTION

Danger of explosion if battery is incorrectly replaced. Replace only with the same or equivalent type recommended by the manufacturer.
When you dispose of the battery, you must obey the law in the relative area or country.

Using SxS Memory Cards

This camcorder records audio and video on SxS memory cards (optional) inserted in the card slots.

About SxS Memory Cards

Usable SxS memory cards

Use the following Sony-made SxS memory cards. Operations are not guaranteed with memory cards other than the following cards.

SxS PRO+ series

SxS PRO series

SxS-1 series

These cards comply with the ExpressCard standard.

For details on using SxS memory cards and usage-related precautions, refer to the instruction manual for the SxS memory card.

SxS, SxS PRO and SxS-1 are trademarks of Sony Corporation.
The ExpressCard word mark and logo are owned by Personal Computer Memory Card International Association (PCMCIA) and are licensed to Sony Corporation. All other trademarks are the property of their respective owners.

Inserting/Removing an SxS Memory Card

Inserting an SxS memory card

1 Open the cover of the card slot block *(page 11)*.

2 Insert the SxS memory card into the slot with the SxS label facing right.

The ACCESS lamp *(page 11)* lights in red then changes to green once the memory card is ready for use.

3 Close the cover.

Status indications by the ACCESS lamps

Card slots A and B are accompanied by the respective ACCESS lamps to indicate their statuses.

Lamp	Slot statuses
Lights in red	Accessing the loaded SxS memory card (writing/reading data)
Lights in green	Standby (ready for recording or playback using the loaded SxS memory card)
Off	• No SxS memory card is loaded. • The loaded card is invalid. • An SxS memory card is loaded, but another slot is active.

Removing an SxS memory card

1 Open the cover of the card slot block, press the EJECT button *(page 11)*, then pull the button out.

2 Press the EJECT button again to remove the card.

Note

Data are not guaranteed if the power is turned off or a memory card is removed while the card is being accessed. All data on the card may be destroyed. Be sure that the ACCESS lamps are lit in green or off when you turn off the power or remove memory cards.

Switching Between SxS Memory Cards

When SxS memory cards are loaded in both card slots A and B, press the SLOT SELECT button *(page 11)* to select the card you wish to use.
If a card becomes full during recording, switching to the other card is automatically executed.

Note

The SLOT SELECT button is disabled while playback is in progress. Switching is not executed even if you press the button. The button is enabled while the thumbnail screen is displayed *(page 68)*.

Formatting an SxS Memory Card

For an SxS memory card that is not formatted or that was formatted with another system, the message "Unsupported File System" is displayed on the LCD monitor/EVF screen.
Format the card as instructed in *"To execute formatting"* below.

To execute formatting

Using "Format Media" *(page 107)* of the OTHERS menu, specify "Media(A)" (slot A) or "Media(B)" (slot B) then select "Execute." On a confirmation message, select "Execute" again.

The in-progress message and status bar (%) are displayed, and the ACCESS lamp lights in red. When formatting is completed, the completion message is displayed for three seconds.

Recording/playback during formatting

You can perform recording or playback using the SxS memory card in the other card slot while formatting is in progress.

If formatting fails

A write-protected SxS memory card or memory card that cannot be used with this camcorder will not be formatted.
As a warning message is displayed, replace the card with an appropriate SxS memory card, as per the instructions in the message.

Notes

- Use the format function of this camcorder to format SxS memory cards for use on this camcorder. The formats of cards formatted on other devices are not recognized as valid formats, making it necessary to format them again on this camcorder.
- All the data, including recorded pictures and setup files, are erased when a memory card is formatted.

Checking the Remaining Time Available for Recording

While recording (or standing by to record), you can check the time remaining for the SxS memory cards loaded in the card slots on the LCD monitor/EVF screen *(page 13)*.
The available time for recording with the current video format (recording bit rate) is calculated according to the remaining space of each card and displayed in time units of minutes.
The remaining can also be checked in a meter format on the Battery/Media status screen *(page 80)*.

Note

A icon appears if the memory card is write-protected.

Replacing an SxS memory card

- If the available time on two cards in total becomes less than 5 minutes, a message "Media Near Full," flashing of the tally lamps, and a beep sound will warn you. Replace the cards with those with sufficient space.
- If you continue recording until the total remaining time reaches zero, the message changes to "Media Full," and recording stops.

Note

Approximately 600 clips can be recorded on one SxS memory card at maximum.
If the number of recorded clips reaches the limit, the remaining time indication becomes "0," and the message "Media Full" is displayed.

Restoring an SxS Memory Card

If an error occurs with data in a memory card for some reason, the card must be restored.
If an SxS memory card that needs to be restored is loaded, a message that prompts you to execute a restore operation is displayed on the LCD monitor/EVF screen.

To restore a card

Select "Execute" by pressing the up/down/left/right buttons or turning the jog dial, then push the SEL/SET button or the jog dial.

During restoration, the in-progress message and status bar (%) are displayed, and the ACCESS lamp is lit in red.
When restoration is completed, the completion message is displayed for three seconds.

If restoration fails

- A write-protected SxS memory card or one on which an error occurred cannot be restored. For such a card, a warning message is displayed. Release the write protection or replace the card, as per the instructions in the message.
- An SxS memory card on which an error occurred may become usable again through repeated formatting.
- In some cases, only parts of clips cannot be restored. Playback of the restored clips becomes possible again.
- The following operation may restore an SxS memory card for which the message "Could not Restore Some Clips" is repeatedly displayed each time you try the restoration process:

  4 Copy necessary clips to another SxS memory card, using the copy function *(page 74)* of the camcorder or the dedicated application software (supplied) *(page 113)*.

  5 Format the problem SxS memory card, using the format function of this camcorder.

  6 Return the necessary clips to the SxS memory card by copy operation.

Recording/playback during restoration

You can perform recording or playback using the SxS memory card in the other card slot while restoration is in progress.

Note

For restoration of media recorded with this unit, be sure to use this unit. Media recorded with a device other than this unit or with another unit of different version (even of the same model) may not be restored using this unit.

Using Other Media

Notes

- Medias other than an SxS memory card cannot obtain the high reliability and durability equivalent to an SxS memory card for professional use.
- Not all memory cards have been verified to function with this camcorder. For compatible memory cards, contact your dealer.

XQD Memory Cards

By using an optional QDA-EX1 Media Adaptor, you can insert an XQD memory card into the SxS memory card slot and use it instead of an SxS memory card.

Usable XQD memory cards

XQD memory card S series
XQD memory card N series

For details on using a QDA-EX1 Media Adaptor, refer to the instruction manual supplied with it.

Notes

- High-speed playback *(page 9)* may not be properly achieved with an XQD memory card.
- Slow Motion recording by the Slow & Quick Motion recording function *(page 40)* cannot be made with an XQD memory card.

Formatting

When you use an XQD memory card with this camcorder, formatting is required.
An XQD memory card to be used with this camcorder must be formatted using the format function of this camcorder.
It is also necessary to format an XQD memory card for use if a caution message is displayed when you mount the XQD memory card.
For an XQD memory card that was formatted with another system unsupported by this camcorder, the message "Unsupported File System" is displayed on the LCD monitor/EVF screen.
Format the XQD memory card as instructed below.

To execute formatting

Using "Format Media" *(page 107)* of the OTHERS menu, specify "Media(A)" (slot A) or "Media(B)" (slot B), then select "Execute."

An in-progress message and status bar (%) are displayed, and the ACCESS lamp lights in red. When formatting is completed, a completion message is displayed for three seconds.

Note

When formatting, all data in an XQD memory card—including protected images—are erased and cannot be restored.

Connection between the camcorder and a PC

To use an XQD memory card in which data have been recorded with an XDCAM/XDCAM EX-series product, insert it into the slot of the camcorder and connect between the PC and this camcorder using a USB cable.

To use media formatted with this camcorder in the slots of other devices

Make a backup of the media, then format it using the other device.

SD Cards

Use of the optional MEAD-SD02 Media Adaptor permits you to insert an SD card to the SxS memory card slot and use it for recording and playback in the same way as with an SxS memory card.

Usable SD card

Class 10 SDHC card

For details on use of the MEAD-SD02 Media Adaptor, refer to the operating instructions supplied with the respective adaptor.

Notes

- High-speed playback *(page 9)* may not be properly achieved with an SD card.
- Slow Motion recording by the Slow & Quick Motion recording function *(page 40)* cannot be made with an SD card.
- SD cards do not support recording with UDF.

Formatting

When you use an SD card with this camcorder, formatting is required.
An SD card to be used with this camcorder must be formatted using the format function of this camcorder.
It is also necessary to format an SD card for use if a caution message is displayed when you mount the SD card.

For an SD card that was formatted with another system unsupported by this camcorder, the message "Unsupported File System" is displayed on the LCD monitor/EVF screen.
Format the SD card as instructed below.

To execute formatting

Using "Format Media" *(page 107)* of the OTHERS menu, specify "Media(A)" (slot A) or "Media(B)" (slot B), then select "Execute."

An in-progress message and status bar (%) are displayed, and the ACCESS lamp lights in red. When formatting is completed, a completion message is displayed for three seconds.

Note

When formatting, all data in an SD card including protected images are erased and cannot be restored.

Connection between the camcorder and a PC

To use an SD card in which data have been recorded with an XDCAM/XDCAM EX-series product, insert it into the slot of the camcorder and connect between the PC and this camcorder using a USB cable.

To use media formatted with this camcorder in the slots of other devices

Make a backup of the media, then format it using the other device.

USB Flash Drives

UDF

In UDF or exFAT, you can connect a USB flash drive to the external device connector *(page 11)* to record, save, and load the following data.

- *"Loading a Planning Metadata file" (page 51)*
- *"Storing/Retrieving the Setting Data" (page 50)*

The following Sony USB flash drives are recommended for use with this camcorder.

- USM-M Series

Notes

- Use USB flash drives with a capacity of 4 GB to 32 GB.
- USB flash drives other than those listed above may not be recognized if connected to the external device connector.

When using the external device connector

Set "Wi-Fi&Proxy/USB" in "Network" *(page 105)* of the OTHERS menu to "USB A."

Notes

- During this setting, "XAVC-L50 1920×1080/59.94P, 50P" and "XAVC-L35 1920×1080/59.94P, 50P" cannot be selected for "Format" in "System" *(page 105)* of the OTHERS menu.
- During this setting, 60fps and 50fps cannot be selected for "Frame Rate" in "S&Q Motion" when "Format" in "System" of the OTHERS menu is set to "1920×1080/29.97P, 23.98P, 25P."

Formatting (Initializing) USB Flash Drives

USB flash drives must be formatted with the FAT32 file system.

Note

Before using a drive, format it on this camcorder or a PC. If a drive formatted on a PC cannot be used, format it on the camcorder.

1 Connect a USB flash drive to the external device connector.

If the drive is unformatted or has been formatted to other specifications, a message to confirm whether formatting is to be executed appears on the EVF screen.

2 Using the up/down/left/right buttons or the jog dial, select "Execute," then press the SEL/SET button or the jog dial.

The in-progress message and status bar (%) are displayed, and formatting is started. When formatting is completed, the message "Format USB Memory Done" is displayed. The \MSSONY\PRO\XDCAM\MEMDISC folder and the \General\Sony\Planning folder are automatically created in the drive.

If the format operation fails

A format operation may fail because the USB flash drive is write protected, or because it is not the type of drive specified for use with this camcorder.
In this case, an error message appears. Follow the instructions in the error message and exchange the drive for one that can be used with this camcorder.

Restoring USB Flash Drives

When you load a USB flash drive that cannot be mounted normally because the file system is destroyed, a message appears on the LCD monitor/EVF screen to ask whether you want to restore it.
Using the up/down/left/right buttons or the jog dial, select “Execute,” then press the SEL/SET button or the jog dial. The in-progress message and status bar (%) are displayed, and restoration is started.
When restoration is completed, the message “Restore USB Memory Done” is displayed.

- “XQD” is a trademark of Sony Corporation.

Basic Operation Procedure

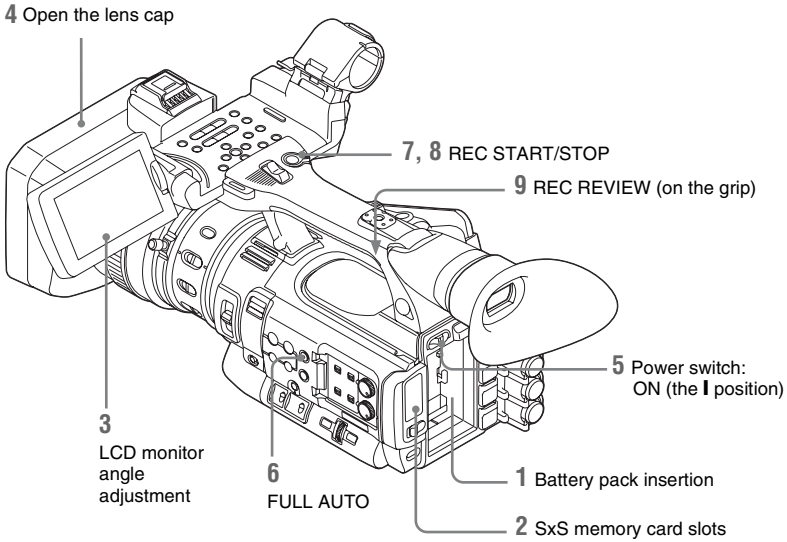

Preparations

1 Mount a fully charged battery pack.

2 Load SxS memory card(s).

If you load two cards, recording is continued by automatically switching to the second card when the first card becomes full.

3 Adjust the angle of the LCD monitor for the best view.

When you wish to use the EVF, fold the LCD monitor to its park position and adjust the angle of the EVF.

4 Open the lens cap.

Pull up the lens cap open/close lever to open the lens cap built in the lens hood.

5 Set the power switch to the ON position.

The recording screen is displayed.

When using the remote commander, activate the remote control mode *(page 19)*.

Note

When you hold the camcorder by the grip, support it from underneath with your left hand.

Recording (Full Auto mode)

6 Press the FULL AUTO button so that the button indicator lights.

Full Auto mode is turned on, TLCS (Total Level Control System) *(page 89)* is activated, Auto Iris, AGC (Auto Gain Control), Auto Shutter, and ATW (Auto Tracing White) are set to ON, then, consequently the brightness and white balance will always be adjusted automatically.
When you wish to adjust them manually, turn Full Auto mode off, and see;
"Iris" on page 31
"Gain" on page 30
"Electronic Shutter" on page 31
"White Balance" on page 29

Note

AF (Auto Focus) is not activated by setting the camcorder to Full Auto mode.

For information of automatic focus adjustment, see "Focus" (page 32).

7 Press the REC START/STOP button.

You can also start recording with the REC START button on the grip.
(If you are using the IR Remote Commander, press the START/STOP button.)
The TALLY lamp lights and recording begins.

8 To stop recording, press the REC START/STOP button again.

You can also stop recording with the REC START button on the grip.
(If you are using the IR Remote Commander, press the START/STOP button.)
Recording stops and the camcorder enters STBY (recording standby) mode.

Note

If you press the REC START/STOP button to start next recording while previous data writing is not completed, the message "Cannot Proceed" may be displayed and recording may not start.

To prevent a switching error

The REC START/STOP button on the handle is incorporated with the REC HOLD lever. If the REC START/STOP button on the handle will not be used, it is recommended to set the lever to the HOLD position to lock the button and prevent unintentional starting/stopping of recording if you accidentally press the button.
To unlock the button, return the lever to its original position.

On holding the handle

When shooting by holding the handle, hold the front end of the handle to keep the camcorder steady.

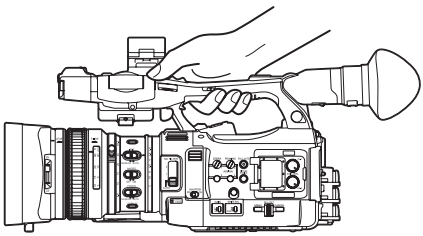

Checking the last recorded clip (Rec Review)

9 Press the REC REVIEW button.

The Rec Review function *(page 37)* is activated, and the last recorded clip is played back for the specified time on the LCD monitor/EVF screen.

To delete clips

You can delete the last recorded clip by using the Last Clip DEL function *(page 50)*. Use the All Clips DEL function *(page 50)* to delete all recorded clips from an SxS memory card. To specify a clip to be deleted, operate the camcorder from the thumbnail screen *(page 68)*.

Clip (recording data)

When you stop recording, video, audio and subsidiary data from the start to end of the recording are recorded as a single clip on an SxS memory card.

Clip name

For each clip recorded with this camcorder, a clip name is automatically generated according to the method selected with "Auto Naming" in "Clip" *(page 106)* of the OTHERS menu.
The default setting of "Auto Naming" is "Plan." With this setting, a clip name defined in planning metadata is applied if a planning metadata file is loaded into the camcorder.
Change the "Auto Naming" setting to "Title" to apply a clip name composed of 4 to 46 alphanumerics and 4 numerics.
Example: ABCD0001
The block of 4 to 46 alphanumerics can be specified as desired using "Clip" in the OTHERS menu before you start recording. (It cannot be changed after recording.)
The value of the 4 numerics is automatically counted up in sequence.

Notes on Clips

The maximum file size for a clip is 43 GB for UDF and exFAT, 4 GB for FAT HD Mode, and 2 GB for FAT SD Mode. If you continue recording for an extended period, recorded materials may be segmented into multiple files, depending on the file size (the maximum number of partitions is 99). The camcorder regards continuous recording as one clip even if it has been segmented into multiple files in FAT mode.

A long clip can be recorded crossing over two memory cards in slot A and B.
When you copy recorded clips to a hard disk, etc., via computer, it is recommended to use the dedicated application software, which you need to download, to maintain the continuity of recorded materials. For details, see *"Software Downloads" (page 157)*.

Note

If copying is done using Explorer (Windows) or Finder (MAC), the continuity and relationships of recorded materials may not be maintained.

Maximum duration of a clip

The maximum clip length is 24 hours for FAT (MP4 or AVI) and 6 hours for UDF (MXF) and exFAT (MXF).
If you exceed the maximum clip length, a new clip will be automatically created. You can check the new clip on the thumbnail screen.

Changing Basic Settings

You can make changes to the settings based on the intended usage of the recorded video or recording conditions.

Video Formats

Selectable formats vary depending on the UDF/exFAT/FAT, HD Mode/SD Mode, and usage region (NTSC Area/PAL Area) settings.

You can change the usage area by setting "Country" in "System" (page 105) of the OTHERS menu.

Switching between UDF/exFAT/FAT

Switch by setting "F.Sys." in "System" *(page 105)* of the OTHERS menu.
After switching this setting, the camcorder will automatically restart.

Note

UDF/exFAT/FAT cannot be switched during recording or playback.

Switching between HD Mode/SD Mode

For HD/SD switching, use "System" *(page 105)* of the OTHERS menu.
After switching this setting, the camcorder will automatically restart.

Note

HD/SD switching is disabled during recording and playback.

Switching between XAVC/MPEG2

For XAVC/MPEG2 switching, use "System" *(page 105)* of the OTHERS menu.
"XAVC/MPEG2" can be selected only when "F.Sys." of the OTHERS menu is set to "exFAT" and "HD/SD" of the OTHERS menu is set to "HD."

Note

XAVC/MPEG2 switching is disabled during recording and playback.

Changing the format

To change the format, use “Format” in “System” *(page 105)* of the OTHERS menu.
Signals from the SDI OUT, A/V OUT, and HDMI OUT connectors are also output according to the format selected with this menu.

ND Filter

ND filters are available for keeping the aperture in a proper range.
2: $^{1}/_{64}$ND
1: $^{1}/_{8}$ND
CLEAR: ND filter not used

White Balance

You can select the adjustment mode according to the shooting conditions.

Preset mode

The color temperature is adjusted to the preset value (factory setting: 3200K) in this mode.
Select this mode when there is no time to adjust the white balance or when you wish to fix the white balance to the condition of you set for a Picture Profile.

Memory A mode, Memory B mode

The white balance is adjusted to the value stored in memory A or memory B.
Pressing the WHITE BAL button executes auto white balance and stores the adjusted value in memory A or memory B.
When the Wi-Fi remote commander is used and the ATW function is set to off, the adjusted value is changed to the one in memory A, irrespective of the status of the WHITE BAL switch.

ATW (Auto-Tracing White balance) mode

In this mode, the camcorder automatically adjusts the white balance to the appropriate condition.
When the color temperature of the light source changes, the white balance adjustment is automatically executed.
Five steps of adjustment speed can be selected with “ATW Speed” *(page 89)* of the CAMERA SET menu.
When the ATW Hold function is assigned to an assignable button *(page 37)*, you can momentarily hold the ATW value to fix the white balance, even in ATW mode, by pressing the button.

Note

Under some conditions of lighting or the shooting subject, adjustment by ATW may fail to provide proper colors.
Examples:
- When the subject of a substantially single color like sky, sea, ground, grass, or certain kinds of flowers occupies most of the frame area.
- When the subject is under a light source of extremely high or extremely low color temperature.

If execution of automatic tracing by the ATW function takes an unacceptably long time or only results in an inadequate effect, then execute the AWB function.

Using the switch

Make a selection with the WHITE BAL switch *(page 10)*.
B: ATW mode or Memory B mode
A: Memory A mode
PRST: Preset mode
The B position of the WHITE BAL switch is assigned to ATW mode at the factory. The setting can be changed with “White Switch <B>” *(page 89)* of the CAMERA SET menu to select Memory B mode.
Setting the camcorder to Full Auto mode *(page 26)* forcibly activates ATW mode.
Assigning the ATW on/off function to an assignable button *(page 37)* permits you to independently activate/deactivate ATW when Full Auto mode is off.

Using the Direct menu

When you press the DISPLAY button *(page 9)*, the current adjustment mode and color temperature are displayed on the screen *(page 13)*.
ATW: ATW mode
W:A: Memory A mode
W:B: Memory B mode
W:P: Preset mode
When the Direct menu *(page 15)* is in All mode, you can select from among ATW, W:A, W:B, and W:P.
When the Direct menu is in Part mode, you can switch between ATW and the mode set with the WHITE BAL switch.
When W:NS is displayed, switching via the Direct menu is not possible.

Executing Auto White Balance

1 To store the adjustment value in memory, select Memory A or Memory B mode.

2 Place a white subject under the same lighting condition and zoom in on it so that a white area is obtained on the screen.

3 Adjust the brightness.

Adjust Iris as instructed in "Adjusting the brightness manually" *(page 31)* below.

4 Press the WHITE BAL button *(page 7)*.

When you execute the adjustment in a memory mode, the adjusted value is stored in memory (A or B) selected in step 1.
When you execute the adjustment in ATW mode, adjustment in ATW is resumed.

Notes

- Auto white balance adjustment cannot be performed when in Preset mode.
- If auto white balance adjustment fails, an error message is displayed on the screen for approximately 3 seconds. If the error message continues to be displayed after several attempts, consult your Sony service representative.

Markers/Zebra Patterns

During recording, various markers and zebra patterns can be inserted into the image on the LCD monitor/EVF screen.
This does not affect recording signals.

Displaying the Markers

Use "Marker" *(page 97)* of the LCD/VF SET menu.

Displaying the Zebra Patterns

A zebra pattern(s) can be inserted to the picture on LCD monitor/EVF screen to check the appropriate luminance level.
Pressing the ZEBRA button (ASSIGN 1 button) *(page 10)* turns the zebra pattern-indication on/off.

Changing the zebra pattern

Using "Zebra" *(page 97)* in the LCD/VF SET menu, you can change the zebra pattern to be displayed.

Gain

Recording with Fixed Gain

You can change the gain of the video amplifier.

Selecting the gain with the switch

The gain value at each of the GAIN switch *(page 10)* positions set at the factory are as follows:
L: 0 dB
M: 9 dB
H: 18 dB
These values can be changed in the range of –3 dB to +18 dB, using the CAMERA SET menu's Gain Setup menu *(page 84)*.

Note

You cannot select a fixed gain when AGC mode is set to On.

Selecting gain using the Direct menu

When you press the DISPLAY button *(page 9)*, the current gain value is displayed on the screen *(page 13)*.
When the Direct menu is in All mode, you can change the gain in steps of 3 dB with the Direct menu.
You can also select AGC mode with the Direct menu.
When the Direct menu is in Part mode, you can switch between only AGC mode and the gain selected with the GAIN switch.

Recording in AGC Mode

The gain of the video amplifier is automatically adjusted according to the picture brightness.
When you set the camcorder to Full Auto mode *(page 26)*, AGC mode is forcibly selected.
When Full Auto mode is off, you can independently turn AGC mode on by setting "AGC" in "TLCS" *(page 89)* of the CAMERA SET menu to "On," or selecting "AGC" with the Direct menu.

Electronic Shutter

Recording with a fixed shutter

Set the shutter speed (cache time).
When you set the SHUTTER switch *(page 10)* to ON, the fixed shutter is turned on in the mode and with the shutter speed you specified with "Shutter" *(page 84)* of the CAMERA SET menu.

Notes

- When Auto Shutter mode is on, the fixed shutter cannot be selected.
- When the SLS/EX SLS mode *(page 31)* is on, the fixed shutter cannot be selected.

Setting with the CAMERA SET menu

The shutter mode and shutter speed can be set with "Shutter" *(page 84)* of the CAMERA SET menu.

Setting with the Direct menu

When you press the DISPLAY button, the current shutter mode and the set value are displayed *(page 13)*.
When the Direct menu *(page 15)* is in All mode, you can change the shutter mode and speed with the Direct menu.

Notes

- When the Direct menu is in Part mode, you cannot turn the shutter off with the Direct menu if the SHUTTER switch is set to ON.
  If the SHUTTER switch is set to OFF, you can switch only between Auto Shutter and Shutter OFF.
- The Direct menu cannot be selected when Full Auto mode is turned on *(page 26)* or when the SLS/EX SLS mode is set.

Shooting in SLS/EX SLS Mode

The shutter speed is specified in the number of accumulated frames. Up to 64 frames can be accumulated in this mode, permitting you to obtain low-noise clear pictures in low light levels or surreal pictures with afterimages.
For SLS/EX SLS, specify the number of accumulated frames with "SLS/EX SLS" *(page 85)* of the CAMERA SET menu. You can select from 2 to 8, 16, 32, 64 frames.
When SLS/EX SLS is ON, you cannot set Full Auto mode *(page 26)*.
When Full Auto mode *(page 26)* is on or Auto Shutter mode is on, and SLS/EX SLS is set to on, Full Auto mode or Auto Shutter mode is canceled.

Shooting in Auto Shutter Mode

The shutter speed is automatically adjusted according to the picture brightness.
When you set the camcorder to Full Auto mode *(page 26)*, Auto Shutter is forcibly selected.
When Full Auto mode is off, you can independently turn Auto Shutter mode on by setting "Auto Shutter" in "TLCS" *(page 89)* of the CAMERA SET menu to "On."

Iris

Adjust the brightness according to the subject.

Recording in auto mode

When Full Auto mode *(page 26)* is set to on:
Iris is forcibly set to Auto mode.
When Full Auto mode is set to off:
When the IRIS switch is set to AUTO, Auto Iris mode is set.
You can select the target level (to make the picture darker or brighter) for Auto Iris via the Setup menu or Direct menu. (The gain control in AGC mode and the shutter speed control in Auto Shutter mode are adjusted in synchronization.)

To adjust the target level with the Setup menu

Set "Level" in "TLCS" *(page 89)* of the CAMERA SET menu.

To adjust the target level with the Direct menu

The target level can also be selected using the Direct menu *(page 15)*. When you press the DISPLAY button, the current Exposure position is displayed on the screen *(page 13)*.

Adjusting the brightness manually

When Full Auto mode is set to off, setting the IRIS switch to MANUAL sets to Manual Iris mode. Rotate the iris ring for the desired iris opening.

Switching to Auto Iris mode temporary

By pressing the assignable button to which "One Push Auto Iris" is assigned during Manual Iris mode, the One Push Auto Iris function is activated. The One Push Auto Iris function is activated while pressing the button. When the button is released, the camcorder returns to Manual Iris mode.

Zoom

Operating Zoom manually

Setting the ZOOM switch *(page 12)* on the bottom of the camcorder to the MANUAL position sets to manual zoom mode.

Using the Power Zoom

The power zoom lever *(page 12)* on the grip and the on-handle ZOOM button *(page 9)* are activated.
The supplied IR Remote Commander and optional lens remote control unit can also be used.
Setting the ZOOM switch on the bottom of the camcorder to the SERVO position sets to power zoom mode.
The current zoom position is displayed on the screen in the range of 0 (Wide) to 99 (Tele) when you press the DISPLAY button.
The numerical indication can be changed to that in a bar by changing "Zoom Position" in "Display On/Off" *(page 97)* of the LCD/VF SET menu.

To adjust with the power zoom lever on the grip

Pressing the lever deeper sets zooming faster.

To adjust with the on-handle ZOOM button

You can select the zoom speed with "Handle Zoom" *(page 86)* of the CAMERA SET menu.
The "Vari" setting enables faster zoom speed the deeper the on-handle ZOOM button is pressed as in the case of the power zoom lever on the grip.
The zoom speed assignment can be changed with "Zoom Speed" *(page 86)* of the CAMERA SET menu.
You can select Soft mode for zooming by using "Zoom Transition" *(page 86)* of the CAMERA SET menu, in which the zooming speed is gradually increased at the beginning then gradually decreased for the end.

When adjusting with the ZOOM button of the IR Remote Commander

The zooming speed depends on the "Remote" *(page 86)* setting in "Zoom Speed" of the CAMERA SET menu.

To use the IR Remote Commander, see "Using the IR Remote Commander" (page 19).

When using a lens remote controller

Zooming can also be controlled from an optional lens remote controller connected via the LENS REMOTE connector.

For operation, refer to the operation guide of the lens remote controller.

Focus

The infinity (∞) position has some margin to compensate for focus change caused by variation in ambient temperature. When shooting an image at infinity in MF mode, adjust the focus while observing the image on the LCD monitor/EVF screen.

Adjusting in Full MF Mode

Pull the focus ring rearward (toward the camcorder body) to set the camcorder to Full MF mode. Focus can only be adjusted with the focus ring manually.

Note

The focus instantly moves to the range index position when you pull the focus ring rearward.

Rotate the focus ring for the best focus while observing the picture on the LCD monitor/EVF screen.
The range index of the focus ring is effective in Full MF mode. The distances correspond to the focus ring positions.

Focus Magnifier

When you press the FOCUS MAG button, the center area of the picture is magnified on the LCD monitor/EVF screen, making the focus adjustment easier.
Press the FOCUS MAG button again or leave the focus ring unmoved for 5 seconds to resume the normal angle for recording.

Peaking

When you press the PEAKING button (ASSIGN 2 button), the peaking function is activated. This function emphasizes the contours of the images on the LCD monitor/EVF screen, making manual focusing easier.
This function does not affect recording signals.
The emphasis level and color of the contours can be set with "Peaking" *(page 96)* of the LCD/VF SET menu.

Adjusting in MF Mode

MF (Manual Focus) mode allows you to activate Auto Focus momentarily when required.
Slide the focus ring forward (to lens hood side), then set the FOCUS switch *(page 10)* to MANUAL.
In this mode, expanded focus function, peaking function, one-push auto focus function, and the MF Assist function are activated.
Rotate the focus ring while looking at the LCD monitor/EVF screen to adjust the focus.

One-Push (Momentary) Auto Focusing

When you press the PUSH AUTO button, auto focusing momentarily activates. One-Push Auto Focusing is terminated when the subject comes into focus.

MF Assist function

If you set "MF Assist" *(page 85)* of the CAMERA SET menu to "On" to enable the MF Assist function, auto focusing is engaged when you stop rotating the lens operation ring, performing fine focus adjustment for the subject in the center of the screen. When the fine adjustment is completed, automatic focusing with the MF Assist function is terminated.
You can also enable the MF Assist function via the Direct menu *(page 15)*. When you press the DISPLAY button, the selected focus mode is displayed on the screen *(page 13)*. The Direct menu cannot be selected in a mode other than MF mode.

Adjusting in AF Mode

AF (Auto Focus) mode adjusts the focus automatically.
Slide the focus ring forward, then set the FOCUS switch to AUTO.

Using Macro Mode

When you set the MACRO switch to ON in AF or MF mode, Macro mode is activated, permitting you to adjust the focus in a range that includes the macro area.
The Macro mode is invalid in Full MF mode.

Steady Shot

By activating the Steady Shot function, blurring of images due to camera shaking can be reduced.

Press the STEADY SHOT button on the lens.

Pressing the button turns the Steady Shot function on or off.
The setting of the Steady Shot function is displayed in the EVF screen.

Note

If the camcorder is fixed to a tripod for stable condition, deactivate the Steady Shot function.

Flickers

Setting the shutter speed according to the power-supply frequency

Activate the electronic shutter *(page 31)* and set the shutter speed according to the power supply frequency.

When the frequency is 50 Hz

Set the shutter speed to 1/50 or 1/100 seconds.

When the frequency is 60 Hz

Set the shutter speed to 1/60 or 1/120 seconds.

Using the Flicker-Reduction function

Set "Mode" in "Flicker Reduce" *(page 85)* of the CAMERA SET menu to "Auto" or "On" and set "Frequency" to the power-supply frequency (50 Hz or 60 Hz).

Note

If the frame rate selected for recording is close to the power-supply frequency, flicker may not be reduced sufficiently even if you activate the Flicker-Reduction function. In such cases, use the electronic shutter.

Time Data

Setting the Timecode

Specify the timecode to be recorded with "Timecode" and "TC Format" of the TC/UB SET menu *(page 99)*.

Setting the Users Bit

You can add a hexadecimal number of 8 digits for pictures as the user bits.
The user bits can also be set to the current date. Use "Users Bit" *(page 99)* of the TC/UB SET menu.

Displaying the Time Data

Pressing the DISPLAY button displays the time data on the screen *(page 13)*.
The indication is switched among the timecode, user bits, and recording duration each time you press the DURATION/TC/U-BIT button *(page 9)*.

Display	Contents
TCG **:**:**:**	Timecode
CLK **:**:**:**	Timecode (Clock mode)
UBG ** ** ** **	User bits
DUR **:**:**	Duration from the beginning of recording

Recording Audio Signals

Four channels (CH-1/CH-2/CH-3/CH-4) of audio can be recorded (Linear PCM recording) in synchronization with video recording.
You can use the built-in stereo microphones (omni-directional electret condenser microphones) or 2-channel external audio inputs to the AUDIO IN connectors by switching with the AUDIO IN switches.

Using the Built-in Stereo Microphones

Set the AUDIO IN switches, both CH-1 and CH-2 *(page 10)*, to INT.

Using External Inputs

1. **Set the AUDIO IN switches CH-1 and CH-2 to EXT.**
2. **Connect external audio sources to the AUDIO IN connectors CH-1 and CH-2 *(page 8)*.**
3. **Set the input (LINE/MIC/MIC+48V) switches CH-1 and CH-2 *(page 8)* to LINE (line level: +4 dBu).**

Using an External Microphone

You can use an external microphone for recording, such as the ECM-673 Electret Condenser Microphone.

1. **Lift up the handle of the external microphone holder *(page 8)* and open the cover.**
2. **Attach a microphone, then return the external microphone holder cover to its original position to secure it.**

3 **Connect the microphone cable to the AUDIO IN CH-1/CH-2 connectors.**

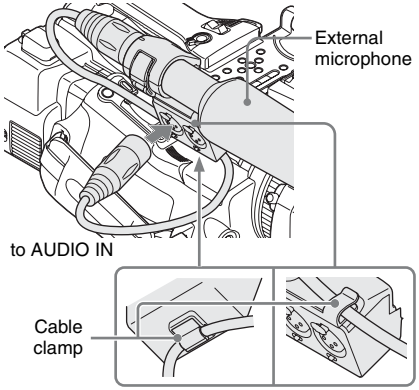

4 **Set the corresponding AUDIO IN switch (CH-1/CH-2) *(page 10)* to EXT.**

5 **Set the corresponding input (LINE/MIC/MIC+48V) switch (CH-1/CH-2) *(page 8)* according to the connected microphone.**

MIC: For a microphone that requires no power supply

MIC +48V: For a microphone that requires +48V power supply (such as the ECM-673)

Adjusting the Audio Recording Levels

To adjust the levels automatically (AGC)

When the AUDIO SELECT switches CH-1 and CH-2 *(page 10)* are set to AUTO, the audio recording levels are automatically adjusted.

To adjust the levels manually

Set the AUDIO SELECT switches CH-1 and CH-2 to MANUAL and adjust the audio recording levels by turning the AUDIO LEVEL knobs *(page 10)*.

Set the controls to 5 for the reference setting (0 dB). Setting to 10 maximizes the level (+12 dB), and setting to 0 minimizes it (–∞).

The input levels are displayed on the screen when you press the DISPLAY button *(page 13)*.

Audio recording in special recording modes

No audio recording is made in Interval Recording or Frame Recording.

No audio recording is made in Slow & Quick recording if the recording frame rate is set to a value different from the playback frame rate.

Monitoring the Audio

You can monitor the sounds being recorded with the headphones connected to the headphone connector (stereo mini jack) *(page 7)*.

Note

The built-in speaker is disabled during recording (or when standing by to record).

To adjust the audio monitoring volume

Use the VOLUME buttons *(page 9)*.

Useful Functions

Color Bars/Reference Tone

By setting "Camera/Bars" in "Color Bars" *(page 85)* of the CAMERA SET menu to "Bars," you can output a color-bar signal in place of the camera picture. When this item is set to "Camera," the output returns to the camera picture.
A 1-kHz reference tone is output with the color bar signal if "1KHz Tone" in "Audio Input" *(page 91)* of the AUDIO SET menu is set to "On."
The color-bar signal and reference-tone signal are also fed out from the SDI OUT, HDMI OUT, i.LINK, VIDEO OUT (color bars only), and A/V OUT connectors.
You can select the type of color bars with "Bars Type" in "Color Bars" of the CAMERA SET menu.

Notes

- The color bar mode cannot be output in Slow & Quick Motion mode and SLS/EX SLS mode.
- You cannot switch to "Color Bars" while recording. (Switching from "Color Bars" to "Camera" is available.)

Shot Marks

When you record shot marks for important scenes of a clip recorded in UDF, exFAT, or FAT HD Mode as subsidiary data, you can access the marked points easily on a Shot Mark screen *(page 76)*, which only displays scenes with shot marks only. This increases editing efficiency.
The camcorder permits you to record two types of shot marks: shot mark 1 and shot mark 2.
Shot marks can be recorded as needed during recording or can be added after recording while checking the playback pictures on the thumbnail screen.

Inserting a shot mark during recording

If the Shot Mark1 or Shot Mark2 function is assigned to an assignable button *(page 37)*, press the button where you want to insert a shot mark.

For operations to add shot marks after recording, see "Adding Shot Marks During Playback (UDF, exFAT, and FAT HD Mode)" on page 71 and "Adding/Deleting Shot Marks (UDF, exFAT, and FAT HD Mode)" on page 77.

For operation to apply a name to a shot mark, see "Defining Shot Mark names in Planning Metadata" on page 53.

OK/NG/KP Flags (UDF and exFAT)

You can add OK/NG/KP flags to clips recorded with UDF or exFAT. By adding flags, you can set the camcorder to display only clips with certain flag settings on the thumbnail screen (OK/NG/KP/None-Clip thumbnail screen) *(page 69)*.

Note

Use the "Lock Clip" setting *(page 72)* to protect clips.

Adding a flag

During recording or playback, press the assignable button to which you assigned the Clip Flag OK/Clip Flag NG/Clip Flag Keep function.

You can add an OK/NG/KP flag to a clip during recording or playback.

Deleting a flag

Press the assignable button, twice in succession, to which you assigned the Clip Flag OK/Clip Flag NG/Clip Flag Keep function.

You can delete the OK/NG/KP flag from a clip.

OK/NG/KP flags can also be added and deleted from the thumbnail screen. For details, see "Adding/Deleting a Flag (UDF and exFAT)" (page 74).

OK Mark (FAT HD Mode Only)

By adding the OK mark to a clip recorded in FAT HD Mode, you can prevent the clip from being deleted or divided inadvertently. You can also set the camcorder to display only clips with the OK mark on the thumbnail screen (OK-Clip thumbnail screen) *(page 69)*.

Adding the OK mark

When recording of a clip ends, press the assignable button to which you assigned the OK Mark function.

While standing by to record, you can also add an OK mark to the last-recorded clip ("Last Clip") on the selected memory card.

Deleting the OK mark

Press the assignable button to which you assigned the OK Mark function, and select "Execute."

While standing by to record, you can also delete the OK mark from the clip with the last-added OK mark.

Adding or deleting the OK mark to or from clips before the last one

Make changes via the thumbnail screen.

For details on making settings, see "Adding/Deleting the OK Mark (FAT HD Mode Only)" (page 74).

Rec Review

You can review the last recorded clip on the screen (Rec Review).

Press the REC REVIEW button *(page 12)* after recording is finished.

If the Rec Review function is assigned to an assignable button *(page 37)*, you can also use that button.
The last 3 seconds, 10 seconds, or the entire part of the clip is displayed, depending on the "Rec Review" setting *(page 89)* of the CAMERA SET menu.
Rec Review is terminated at the end of the clip, resuming STBY (recording standby) status.

To interrupt Rec Review

Press the REC REVIEW or STOP/CAM button or the assignable button to which you assigned the Rec Review function.

Notes

- During Rec Review playback, the playback control buttons other than the STOP/CAM button are disabled.
- If the video format was changed after recording, Rec Review cannot be performed (except when the change was from SP 1440×1080/23.98P to SP 1440×1080/59.94i).
- The Setup and PICTURE PROFILE menus cannot be operated during Rec Review.

Assignable Buttons

The camcorder has five assignable buttons *(page 10)* to which you can assign various functions for convenience.

To change functions

Use "Assign Button" *(page 103)* of the OTHERS menu.
The assigned functions can be viewed on the Button/Remote status screen *(page 80)*.

Interval Recording

The Interval Recording (time-lapse recording) function is especially effective for shooting objects that move very slowly.
The specified number of frames are automatically recorded at the specified intervals.

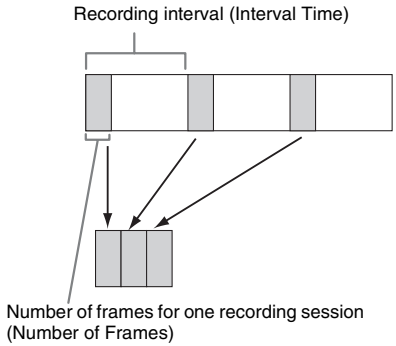

It is recommended to fix the camcorder to a tripod or equivalent and use the IR Remote Commander to start/stop recording rather than pressing the REC START/STOP button of the camcorder.

Notes

- Audio cannot be recorded in Interval Recording mode.
- Interval Recording cannot be set to "On" simultaneously with Frame Recording, Picture Cache Recording, Slow & Quick Motion, Clip Continuous Recording, or Proxy Recording. When you set Interval Recording to "On," these other functions are forcibly set to "Off."
- Interval Recording mode cannot be used when "Format" in "System" *(page 105)* of the OTHERS menu is set to "HQ 1280×720/23.98P" (in UDF HD

Mode and FAT HD Mode) or "SP 1440×1080/23.98P" (in FAT HD Mode).
- Interval Recording mode cannot be used when the items "DVCAM" or "HDV" are set for "SDI/HDMI/i.LINK I/O Select" *(page 93)* of the VIDEO SET menu, and the video format of "Format" in "System" *(page 105)* of the OTHERS menu is set to other than "HQ mode/23.98P."

Preparatory settings

Before starting Interval Recording, make the necessary settings of the CAMERA SET menu *(page 86)* in advance.

Performing Interval Recording

When the preparatory settings are completed, you can start recording.

Press the REC START/STOP button.

Notes

- You cannot change the "Interval Time" and "Number of Frames" settings while Interval Recording is in progress. To change them, pause recording.
- After starting Interval Recording, Rec Review operation is disabled, even during an interval.
- The timecode is recorded in Rec Run mode *(page 99)* during Interval Recording.
- Some extra frames may be recorded if you stop recording or switch the card slot while recording is halted in Interval Recording mode.
- "Setting" for "Interval Rec" is automatically set to "Off" when you set the power switch to OFF, while the "Interval Time" and "Number of Frames" settings are maintained.

Frame Recording

The Frame Recording function is especially effective for clay animation recording.
The specified number of frames are recorded intermittently when you press the REC START/STOP button.
It is recommended to fix the camcorder to a tripod or equivalent and use the IR Remote Commander to start/stop recording rather than pressing the REC START/STOP button of the camcorder.

Notes

- Audio cannot be recorded in Frame Recording mode.
- Frame Recording cannot be set to "On" simultaneously with Interval Recording, Picture Cache Recording, Slow & Quick Motion, Clip Continuous Recording, or Proxy Recording. When you set Frame Recording to "On," these other functions are forcibly set to "Off."
- Frame Recording mode cannot be used when "Format" in "System" *(page 105)* of the OTHERS menu is set to "HQ 1280×720/23.98P" (in UDF HD Mode and exFAT HD Mode) or "SP 1440×1080/23.98P" (in FAT HD Mode).
- Frame Recording mode cannot be used when the items "DVCAM" or "HDV" are set for "SDI/HDMI/i.LINK I/O Select" *(page 93)* of the VIDEO SET menu, and the video format of "Format" in "System" *(page 105)* of the OTHERS menu is set to other than "HQ mode/23.98P."

Preparatory settings

Before starting Frame Recording, make the necessary settings of the CAMERA SET menu *(page 86)* in advance.

Performing Frame Recording

When the preparatory settings are completed, you can start recording.

1. **Press the REC START/STOP button.**
   When the number of frames you specified with the menu are recorded, the camcorder automatically enters FRM STBY (Frame Rec Standby) status.
2. **Press the REC START/STOP button again.**
   Each time you press the REC START/STOP button, the camcorder records the specified number of frames then enters FRM STBY status.

Notes

- Recording cannot be stopped until the specified number of frames are recorded. If the power switch is set to OFF during recording, the power is only shut off after the specified number of frames are recorded.
- The Rec Review function cannot be used while recording in Frame Rec mode is in progress.
- You cannot change the "Number of Frames" setting while recording in Frame Rec mode is in progress. To change it, pause the recording.
- The timecode is recorded in Rec Run mode *(page 99)* during Frame Recording.
- Some extra frames may be recorded if you stop recording or switch the card slot while recording is paused in Frame Rec mode.
- "Setting" for "Frame Rec" is automatically set to "Off" when you set the power switch to OFF, while the "Number of Frames" setting is maintained.

Clip Continuous Recording (UDF and exFAT)

Clips are normally created individually for each time you start and stop recording, but you can also continue recording to a single clip regardless of the number of times you start and stop recording by using the Clip Continuous Recording function, which will add recordings to the same clip until the function is disabled or turned off.
This is convenient for when you do not want to create a large number of short clips, or when you do not want to be restricted by a maximum number of clips.
A recording start mark is added to each point at which you resume recording, making it easy to search for each point.

Preparatory settings

Before starting Clip Continuous Recording, make the necessary settings to "Clip Cont. Rec" *(page 87)* of the CAMERA SET menu in advance.
When you set "Setting" to "On," the Clip Continuous Recording function is enabled, and "CONT" appears on the screen *(page 13)*.
You can also assign "Clip Cont. Rec" to an assignable button *(page 37)*, and set "Setting" to "On"/"Off" by pressing the button.

Notes

- Clip Continuous Recording cannot be set to "On" simultaneously with Picture Cache Recording, Interval Recording, Frame Recording, Slow & Quick Motion, or Proxy Recording. When you set Clip Continuous Recording to "On," these other functions are forcibly set to "Off."
- Clip Continuous Recording cannot be used while recording.
- This function cannot be used with FAT.

Performing Clip Continuous Recording

When the preparatory settings are completed, you can start recording.

Press the REC START/STOP button.

When recording starts, the "CONT" indication on the screen changes to "●REC" (with ● in red).

Notes

- If you remove the SxS memory card or the battery while recording or standing by to record (the "CONT" indication appears), the SxS memory card must be restored. Only remove the SxS memory card after Clip Continuous Recording is complete. If "CONT" is flashing (1 time per second), you can remove the SxS memory card.
- Record for at least 2 seconds before you stop recording.

To disable Clip Continuous Recording mode

While standing by to record, set "Setting" in "Clip Cont. Rec" *(page 87)* of the CAMERA SET menu to "Off."

Restricted Operations

If you perform any of the following operations while recording or standing by to record, 1 continuous clip will not be created. The next time you start recording, a new clip will be created.

- Performing clip operations (locking, deleting, or changing the names of clips).
- Switching the memory card slot.
- Changing the recording format.
- Setting the power switch to OFF.
- Displaying the thumbnail screen.
- Playing clips.

Picture Cache Recording: Retroactively Record

When the Picture Cache Recording function is active, the camcorder stores the last few seconds of video captured in the built-in cache memory to permit you to start recording video on an SxS memory card from a point before you press the REC START/STOP button. The maximum picture cache time is 15 seconds.

Notes

- Picture Cache Recording cannot be set to "On" simultaneously with Frame Recording, Interval Recording, Slow & Quick Motion, Clip Continuous Recording, or Proxy Recording. When you set Picture Cache Recording to "On," these functions are forcefully disabled.
- Picture Cache Recording mode cannot be used while recording, or while using Recording Review or Freeze Mix.
- Picture Cache Recording is set to "Off" when you change any of the settings in "System" *(page 105)* of the OTHERS menu.
- When Picture Cache Recording is "On," the time code is always recorded in Free Run mode regardless of the TC/UB SET menu settings *(page 99)*.
- When "Format" in "System" of the OTHERS menu is set to XAVC-I, the Picture Cache time can be set up to 4 seconds.

Preparatory settings

Before starting Picture Cache Recording, set "P.Cache Rec" *(page 87)* of the CAMERA SET menu.
"Setting" for Picture Cache Recording can also be set to "On"/"Off" by assigning it to an assignable button *(page 37)* and using that button.
When the setting has been made, the special recording/operation status indication block on the screen shows "●CACHE," with ● in green *(page 13)*.

Performing Picture Cache Recording

Press the REC START/STOP button.

Recording begins, and stored video in the cache memory is written first to the SxS memory card. The on-screen "●CACHE" indication changes to "●REC" (● is red).

To cancel the Picture Cache Recording function

Set "Setting" in "P.Cache Rec" of the CAMERA SET menu to "Off" or press the assignable button to which you assigned the Picture Cache function.

Notes

- If you change the recording format, the cached data are cleared and caching is newly started. Therefore, data cached before you changed the format cannot be recorded if you start Picture Cache Recording immediately after changing the format.
- If you start/stop Picture Cache Recording immediately after you insert an SxS memory card, data may not be recorded on the card.
- Picture caching starts when you activate the Picture Cache Recording function. Therefore, video before the function is activated cannot be recorded with Picture Cache Recording.
- Picture Cache Recording is invalid for external input signal (HDV).
- As picture caching is disabled while an SxS memory card is being accessed, such as during playback, Rec Review, or thumbnail screen display, Picture Cache Recording of such a period cannot be made.
- Although you can change the cache time setting while recording, any new value becomes valid only after recording has stopped.

Slow & Quick Motion

When the camcorder is in UDF HD Mode, exFAT HD Mode, or FAT HD Mode and the video format *(page 105)* is set to one of the following settings, you can set the recording frame rate and playback frame rate to different values.

NTSC Area

HD422 50/1080/29.97P
HD422 50/1080/23.98P
HD422 50/720/59.94P
HD422 50/720/29.97P
HD422 50/720/23.98P
XAVC-I 1080/29.97P
XAVC-L50 1080/29.97P
XAVC-L35 1080/29.97P
XAVC-I 1080/23.98P
XAVC-L50 1080/23.98P
XAVC-L35 1080/23.98P
XAVC-I 720/59.94P
XAVC-L50 720/59.94P
HQ 1920×1080/29.97P
HQ 1920×1080/23.98P
HQ 1280×720/59.94P
HQ 1280×720/29.97P
HQ 1280×720/23.98P (FAT HD Mode only)

PAL Area

HD422 50/1080/25P
HD422 50/720/50P
HD422 50/720/25P
XAVC-I 1080/25P
XAVC-L50 1080/25P
XAVC-L35 1080/25P
XAVC-I 720/50P
XAVC-L50 720/50P
HQ 1920×1080/25P
HQ 1280×720/50P
HQ 1280×720/25P

Notes

- Slow & Quick Motion recording cannot be used in SD Mode.
- Slow & Quick Motion cannot be set to "On" simultaneously with Frame Recording, Interval Recording, Picture Cache Recording, Clip Continuous Recording, or Proxy Recording. When you set Slow & Quick Motion to "On," these other functions are forcibly set to "Off."
- Slow & Quick Motion mode cannot be used while recording, or while using Recording Review or Freeze Mix.
- Slow & Quick Motion mode cannot be used when "SLS/EX SLS" *(page 85)* of the CAMERA SET menu is set to other than "OFF."

- Audio cannot be recorded when the recording and playback frame rates differ.

Preparatory settings

Before starting Slow & Quick Motion recording, set "S&Q Motion" *(page 87)* of the CAMERA SET menu.
When the special recording mode indication on the screen is active, "S&Q Motion" is displayed on the screen *(page 13)*.

Setting the recording frame rate with the Direct menu

When the special recording mode indication on the screen is active, [Recording frame rate]/[Playback frame rate fps] is displayed under "S&Q Motion."
You can change the recording frame rate with the Direct menu *(page 15)*.

Recording in Slow & Quick Motion Mode

When the preparatory settings are completed, you can start recording.

Press the REC START/STOP button.

Notes

- You cannot change the Frame Rate settings while Slow & Quick Motion recording is in progress. To change them, pause the recording.
- The timecode is recorded in Rec Run mode during Slow & Quick Motion recording *(page 99)*.
- When recording at a low-speed frame rate, it may take time until recording stops after you press the REC START/STOP button.
- Slow & Quick Motion mode is automatically set to "Off" when you set the camcorder's power switch to OFF. However, the Frame Rate setting is saved.

Freeze Mix: Image Alignment

In UDF HD Mode, exFAT Mode, or FAT HD Mode, an image (still picture) of a recorded clip can be temporarily superimposed on the current camera picture, permitting you to easily align images for your next recording.

To use the Freeze Mix function

Assign the Freeze Mix function to one of the assignable buttons in advance *(page 37)*.

Superimposing a Freeze Mix image

While recording or reviewing images by pressing the REC REVIEW button, press the ASSIGN button to which you assigned "Freeze Mix" at the image with which you want to align. The image is displayed as a still picture over the current camera picture.

Canceling Freeze Mix status

You can cancel it with the ASSIGN button to which you assigned "Freeze Mix" or the REC START/STOP button.
When you cancel Freeze Mix status by pressing the ASSIGN button, the normal camera picture is displayed.
When you cancel Freeze Mix status by pressing the REC START/STOP button, normal recording begins.

Notes

- The Freeze Mix function cannot be used in SD Mode.
- Freeze Mix cannot be used when "Format" in "System" *(page 105)* of the OTHERS menu is set to "HQ 1280×720/23.98P" (in UDF HD Mode and exFAT HD Mode) or "SP 1440×1080/23.98P" (in FAT HD Mode).
- If the "Format" setting of the recorded picture and the current camera picture differ, the Freeze Mix display cannot be achieved.
- The Freeze Mix display cannot be obtained in Slow & Quick Motion mode or Slow Shutter mode.
- You cannot operate the Setup menus and PICTURE PROFILE menu in Freeze Mix status.

Automatic Adjustment of Flange Focal Length

When automatic adjustment of flange focal length is activated, focusing is performed both at the wide-angle and telephoto ends of the zoom for flange focal length adjustment and the result is stored so that the in-focus condition is maintained even if you change the zoom position after focusing.

Notes

- If a subject of insufficient contrast is used, or if the camcorder or subject moves during the adjustment, adjustment cannot be made properly. Once the adjustment begins, do not touch the camcorder body or lens until it ends.
- Set "SLS/EX SLS" of the CAMERA SET menu to "OFF" before starting the adjustment.

- Be careful that no light source, such as a lamp, the sun, or a bright window, is in field of view during flange focal length adjustment.
- Contact your dealer if a flange focal length adjustment chart is required.

1 Set the power switch to ON.

2 Set the ND FILTER switch to CLEAR.

3 Place a high-contrast subject, such as a flange focal length adjustment chart, about 3 m (10 ft.) away from the camcorder, and light it well enough to provide a sufficient video output level.

Frame the subject so that it is located in the center at the telephoto end of the zoom. Make sure that any object located closer to the lens than the subject is out of frame at the wide-angle end.

4 Set the ZOOM switch on the bottom of the camcorder to SERVO (Power Zoom mode).

5 Set "Auto FB Adjust" of the CAMERA SET menu to "Execute" in the setup menu, then press the SEL/SET button or the jog dial.

The adjustment begins.
During adjustment, the in-progress message is displayed.
When the adjustment finished, the completion message is displayed.

Notes

- "Auto FB Adjust" cannot be selected when the ND filter is set to 1 or 2.
- Do not change the ND filter while "Auto FB Adjust" is in operation.

If you press the CANCEL button during adjustment

Automatic adjustment of the flange focal length is aborted and the condition before starting the adjustment is resumed.

If the adjustment fails

An error message is displayed.
Check the conditions of the subject and lighting then perform the adjustment again.

Picture Profiles

You can customize the picture quality, depending on the conditions or circumstances of recording, and store settings as a picture profile, enabling you to recall the profile as necessary.
Six different picture profiles (PP1 to PP6) can be stored in memory.
The same standard (reference) values are registered to six picture profiles at the factory as those specified for the Picture Profile Off status.

Note

Picture profiles can be set while recording or standing by to record. They cannot be operated from the thumbnail screen.

Registering the customized settings as a Picture Profile

1 Set the power switch *(page 7)* to ON to turn on the camcorder.

2 Press the PICTURE PROFILE button *(page 10)*.

The PICTURE PROFILE menu is displayed.

3 Using the up/down/left/right buttons or the jog dial, select "SEL," then press the SEL/SET button or the jog dial.

4 Select the number of the picture profile to register from the list, then press the SEL/SET button or the jog dial.

5 Use the up/down buttons or the jog dial to select "SET," then press the SEL/SET button or the jog dial.

6 Make each setting *(page 44)*.

7 When the settings have been made, press the PICTURE PROFILE button.

Selecting a registered Picture Profile

Once you store a picture profile, you can recall the picture quality registered in the picture profile.

1 While standing by to record, press the PICTURE PROFILE button *(page 10)*.

The PICTURE PROFILE menu is displayed.

2 Using the up/down/left/right buttons or the jog dial, select "SEL," then press the SEL/SET button or the jog dial.

3 Select the number of the picture profile to use from the list, then press the SEL/SET button or the jog dial.

If OFF is selected, the picture quality is set to standard and cannot be changed.

4 Press the PICTURE PROFILE button.

The picture profile being selected is displayed when you press the DISPLAY button *(page 13)*. You can also select picture profiles with the Direct menu *(page 15)*.

Picture Profile Items

The values when “Off” is selected at “SEL” of the PICTURE PROFILE menu are shown in bold face (example: **Standard**).

PICTURE PROFILE SET		
Items	**Subitems and setting values**	**Contents**
Profile Name Changing the picture profile name	Profile name **Standard**	Set the profile name in 8 characters at maximum. You can use upper- and lowercase alphabetics, numerics 0 to 9, - (hyphen), _ (underscore) and space.
Matrix Adjusting the color phase over the entire area with matrix operations	Setting **On** / Off	Set to “On” to activate the color phase adjustment function with matrix operations for the entire picture. **Notes** • When this function is set to “Off,” Multi Matrix is also set to “Off” in synchronization. • If color saturation occurs under lighting that contains excessive blue components (such as blue LED lighting), set the “Setting” of “Matrix” to “Off” to reduce the color saturation.
	Select 1 / **2** / 3 / 4 / 5 / 6	Select the built-in preset matrix provided for convenience. 1: Equivalent to SMPTE-240M / 2: Equivalent to ITU-709 / 3: Equivalent to SMPTE WIDE / 4: Equivalent to NTSC / 5: Equivalent to EBU / 6: Equivalent to PAL
	Level –99 to +99 (±**0**)	Adjust the color saturation for the entire picture area.
	Phase –99 to +99 (±**0**)	Adjust the hue for the entire picture area.
	R-G, R-B, G-R, G-B, B-R, B-G –99 to +99 (±**0**)	Finely adjust the color phase for the entire picture area by independently setting each of the factors.
Multi Matrix mode Selecting multi-matrix correction and color phase adjustment for the specified area	Multi Matrix / **Color Correction**	Select the setting items of the Multi Matrix or the setting items of the Color Correction.

PICTURE PROFILE SET Items	Subitems and setting values	Contents
Multi Matrix Makes settings related to multi-matrix correction. (Unselectable when "Color Correction" is selected in the Multi Matrix mode)	Setting On / **Off**	Set to "On" to enable the multi-matrix correction, which allows specific colors to be selected for saturation correction in a 16-axis hue space.
	Area Indication[1)] On / **Off**	Set to "On" to display a zebra pattern in the areas of the specified color for multi-matrix correction.
	Color Detection[2)] Execute/Cancel	Execute to detect the target color on the screen for multi-matrix correction.
	Axis **B** / B+ /MG- / MG / MG+ / R / R+ / YL- / YL /YL+ / G- / G / G+ / CY / CY+ / B-	Specify a color targeted by multi-matrix correction (16-axis mode).
	Hue –99 to +99 (±**0**)	Set the the hue of the color targeted by multi-matrix correction for each 16-axis mode.
	Saturation –99 to +99 (±**0**)	Adjust the saturation of the color targeted by multi-matrix correction for each 16-axis mode.
Color Correction Adjusting the color phase in a specific area (Unselectable when "Multi Matrix" is selected in the Multi Matrix mode)	Setting On / **Off**	Set to "On" to enable the color phase adjustment for a specific area. (Simultaneous adjustment of multiple areas is not allowed. You can adjust it for one area only.)
	Area Detection[2)] Execute/Cancel	Execute to detect the color in the center of the screen. The area centering around the detected color of the range specified by "Target Width" becomes the target area of Color Correction.
	Area Indication[1)] On / **Off**	Set to "On" to display the Zebra 1 pattern for the area targeted for Color Correction. **Note** The area where the Zebra 1 pattern is displayed and the area targeted for Color Correction, may differ.
	Target Phase 0 to 359 (**130**)	Manually adjust the center color for the area targeted for Color Correction. **Note** When Area Detection is executed, this setting is overwritten by the Area Detection result. Perform fine adjustment with this item as required.
	Target Width 0 to 90 (**40**)	Set the width of color phase for the area targeted for Color Correction.
	Level –99 to +99 (±**0**)	Set the saturation for the color in the target area.
	Phase –99 to +99 (±**0**)	Adjust the hue for the color in the target area.

PICTURE PROFILE SET		
Items	**Subitems and setting values**	**Contents**
White Setting the white balance offset and the color temperature of the preset white	Offset White On / **Off**	Set to "On" to shift the conversion value for auto white balance in Memory A or B mode and that for auto tracing white in ATW mode to a lower color temperature or a higher color temperature.
	Offset<A> –99 to +99 (±**0**)	Adjust the volume of the offset white (shifting volumes) of the conversion value in Memory A, Memory B, or ATW mode, respectively.
	Offset<B> –99 to +99 (±**0**)	
	Offset<ATW> –99 to +99 (±**0**)	
	Preset White 2100 to 10000 (**3200**)	Adjust the preset color temperature when Preset white balance mode is selected in steps of 100K. **Notes** • Except when the white balance is in Memory A or B mode or when ATW is active, you cannot confirm the result of changing the Offset White and Offset settings on the screen. • Except when Preset white balance mode is selected, you cannot confirm the result of changing the Preset White settings on the screen.
HD Detail Adjusting the details to be applied to the picture in HD Mode	Setting **On** / Off	Set to "On" to apply the details to the video signal.
	Level –99 to +99 (±**0**)	Adjust the detail level.
	Frequency –99 to +99 (±**0**)	Set the center frequency of the details. Setting the center frequency higher decreases the details, and setting it lower increases the details.
	Crispening –99 to +99 (±**0**)	Adjust the noise-suppression level. When you set it to a higher level, less noise may be seen, as fine elements of details are deleted leaving only high-level elements. When you set it to a lower level, fine elements are applied while increasing noise.
	H/V Ratio –99 to +99 (±**0**)	Adjust the horizontal-to-vertical ratio of detail elements. A higher value makes the vertical elements increased with respect to the horizontal elements.
	White Limiter –99 to +99 (±**0**)	Limit the white details.
	Black Limiter –99 to +99 (±**0**)	Limit the black details.
	V DTL Creation NAM / Y / G / **G+R**	Select the source signal to generate vertical details from among NAM (G or R whichever is higher), Y, G, and G+R.
	Knee APT Level –99 to +99 (±**0**)	Adjust the knee aperture level (level of details to be applied to the sections above the knee point).

PICTURE PROFILE SET		
Items	**Subitems and setting values**	**Contents**
SD Detail Adjusting the details to be applied to the picture in SD Mode	Setting **On** / Off	Set to "On" to apply the details to the video signal.
	Level –99 to +99 (±**0**)	Adjust the detail level.
	Frequency –99 to +99 (±**0**)	Set the center frequency of the details. Setting the center frequency higher decreases the details, and setting it lower increases the details.
	Crispening –99 to +99 (±**0**)	Adjust the noise-suppression level. When you set it to a higher level, less noise may be seen, as fine elements of details are deleted leaving only high-level elements. When you set it to a lower level, fine elements are applied while increasing noise.
	H/V Ratio –99 to +99 (±**0**)	Adjust the horizontal-to-vertical ratio of detail elements. A higher value makes the vertical elements increased with respect to the horizontal elements.
	White Limiter –99 to +99 (±**0**)	Limit the white details.
	Black Limiter –99 to +99 (±**0**)	Limit the black details.
	V DTL Creation NAM / **Y** / G / G+R	Select the source signal to generate vertical details from among NAM (G or R whichever is higher), Y, G, and G+R.
	Knee APT Level –99 to +99 (±**0**)	Adjust the knee aperture level (level of details to be applied to the sections above the knee point).
Skin Tone Detail Adjusting the details to be applied to the areas of a specific color phase	Setting On / **Off**	Set to "On" to enable the detail level adjustment for specific color-phase areas. The detail level is uniform over the entire picture with the Off setting.
	Level –99 to +99 (±**0**)	Adjust the skin-tone detail level.
	Area Detection[2)] Execute/Cancel	Select "Execute" to detect the color in the center of the screen. The area centering on the detected color becomes the target area for Skin Tone Detail control.
	Area Indication[1)] On / **Off**	Set to "On" to display the Zebra 1 pattern for the target area for Skin Tone Detail control.
	Saturation –99 to +99 (±**0**)	Adjust the color (saturation) level for Skin Tone Detail control. **Note** When Area Detection is executed, this setting is automatically returned to 0.
	Phase 0 to 359 (**130**)	Adjust the center color-phase value for the target area for Skin Tone Detail control. **Note** When Area Detection is executed, this setting is automatically changed to the value equivalent to that of the detected color.

PICTURE PROFILE SET		
Items	**Subitems and setting values**	**Contents**
	Width 0 to 90 (**40**)	Adjust the width of the color phase of the target area for Skin Tone Detail control. **Note** When Area Detection is executed, the Width setting automatically returns to 40.
Aperture Making settings related to aperture correction	Setting **On** / Off	Set to "On" to enable aperture correction (processing to improve resolution by adding high-frequency aperture signals to the video signal, which corrects degeneration due to high-frequency characteristics).
	Level –99 to +99 (±**0**)	Select the level for the aperture correction.
Knee Adjusting the knee level	Setting **On** / Off	Set to "On" to compress the high-luminance area of the picture. **Notes** Knee is fixed and cannot be changed in the following cases: • When Gamma is set to HG1 to 4 • When the electronic shutter is in slow shutter mode • When EX SLS is active
	Auto Knee **On** / Off	Set to "On" to automatically set the best knee conditions according to the luminance level of the picture. With "Off" the knee conditions can be manually adjusted independently of the luminance level of the picture.
	Point 50 to 109 (**90**)	Set the knee point when Auto Knee is "Off."
	Slope –99 to +99 (±**0**)	Set the knee slope (volume of compression) when Auto Knee is "Off."
	Knee SAT **On** / Off	Set to "On" to enable the knee saturation adjustment (level for the area over the knee point).
	Knee SAT Level –99 to +99 (±**0**)	Adjust the knee saturation level for the area over the knee point.
White Clip	Setting **On** / Off	Turns white clipping adjustment on or off.
	Level When "Country" is set to other than "PAL Area" 90.0%~109.0% (**108.0%**) When "Country" is set to "PAL Area" 90.0%~109.0% (**105.0%**)	Specifies the white clip level.
Gamma Adjusting the gamma compensation level and selecting the gamma curve	Level –99 to +99 (±**0**)	Adjust the gamma compensation level.
	Select[3)] STD1 to STD6 / HG1 to HG4 (HD: **STD5**, SD: **STD4**)	Select the type of reference curve for gamma compensation.

PICTURE PROFILE SET		
Items	**Subitems and setting values**	**Contents**
Black Adjusting the black	–99 to +99 (±**0**)	Adjust the master black level.
Black Gamma Adjusting the black gamma level	–99 to +99 (HD: **±0**, SD: **-16**)	Adjust the level of black gamma function that emphasizes only the dark areas of the picture to clear the tones or on the contrary de-emphasizes it to reduce noise.
Low Key SAT Adjusting the low key saturation	–99 to +99 (±**0**)	Adjust the level of the low key saturation to heighten the colors only in the dark areas of the picture or pale them to reduce noise.
Copy Copying a picture profile	Execute / Cancel	Select "Execute" to copy.
PP Data Writing/loading a picture profile	Store Execute / Cancel	Select "Execute" to store a picture profile on an SxS memory card.
	Recall Execute / Cancel	Select "Execute" to load a picture profile from an SxS memory card.
Reset Resetting a picture profile	Execute / Cancel	Select "Execute" to reset.

1) The Area Indication "On"/"Off" setting is common to all picture profiles PP1 to PP6.

2) To execute "Color Detection" of "Multi Matrix" or "Area Detection" of "Color Correction"/"Skin Tone Detail"

1. **Select "Color Detection" or "Area Detection."**
   A square marker that indicates the detection area appears in the center of the screen, and "Execute" and "Cancel" are displayed below.
2. **Select "Execute."**
   Color-phase detection in the marker area is performed.
   When detection successfully ends, a completion message is displayed then the screen is restored.
   With Multi Matrix, the target color of multi-matrix correction is changed to the color detected by "Color Detection," and the Area Indication (zebra pattern) appears on the screen.
   With Skin Tone Detail, the target area for the adjustment is changed to the area centering around the color detected by "Area Detection," and the Area Indication (zebra pattern) appears on the screen.
   If detection fails, an error message appears, then the precious screen is restored.

3) Available gamma curves from "Select" in "Gamma" (STD: Standard gamma, HG: Hyper gamma)

STD1: A gamma table equivalent to an SD camcorder.
STD2: A gamma table with ×4.5 gain.
STD3: A gamma table with ×3.5 gain.
STD4: A gamma table equivalent to the SMPTE-240M standard.
STD5: A gamma table equivalent to the ITU-R709 standard.
STD6: A gamma table with ×5.0 gain.
HG1: A gamma table for turning 325% D-range input into 100% output.
HG2: A gamma table for turning 460% D-range input into 100% output.
HG3: A gamma table for turning 325% D-range input into 109% output.
HG4: A gamma table for turning 460% D-range input into 109% output.

Deleting Clips

While standing by to record, the Last Clip DEL function for deleting the last recorded clip and the All Clips DEL function for deleting all clips from an SxS memory card are available.

For clip deletion on the thumbnail screen, see "Deleting Clips" on page 75.

To delete using the assignable button

Assign the Last Clip DEL function to one of the assignable buttons *(page 37)* in advance.
Press the assignable button to which you have assigned "Last Clip DEL," and select "Execute" to delete the last recorded clip from the SxS memory card.

To delete using the Setup menu

Select "Last Clip DEL" in "Clip" *(page 106)* of the OTHERS menu, select "Execute," then select "Execute" again to delete the last recorded clip from the SxS memory card.

Note

When Clip Continuous Recording is set to "On," "Last Clip DEL" cannot be selected.

Deleting clips collectively

Select "All Clips DEL" in "Clip" *(page 106)* of the OTHERS menu, select "Execute," then select "Execute" again to delete all the clips from the SxS memory card.

Notes

- If the SxS memory card contains clips of both of HD Mode and SD Mode, only the clips of the currently selected mode are deleted.
- Clips with the OK mark *(page 36)* cannot be deleted if FAT is selected for the file system. If UDF or exFAT is selected, clips set to "Lock Clip" *(page 72)* cannot be deleted.

Storing/Retrieving the Setting Data

You can store all the menu settings (including picture profiles) as a setup file on an SxS memory card or a USB flash drive.
By retrieving the stored setup file, the proper setup condition can be immediately obtained.

Note

Values for "Clock Set" and "Hours Meter" of the OTHERS menu are not stored.

Storing the Setup file

To use an SxS memory card

Only one setup file—designated with the file name "SETUP.SUF"—can be stored on one SxS memory card.

1 Insert a memory card on which you wish to store the setup file to a card slot.

Check that the corresponding memory card icon is displayed on the screen. If a memory card in the other slot is selected, press the SLOT SELECT button to switch.

2 Select "Store" in "Camera Data" *(page 101)* of the OTHERS menu, then select "Execute."

An in-progress message is displayed during writing. When writing is completed, a completion message is displayed.

Notes

- If a setup file already exists on the memory card you specified in Step 1, a message to confirm whether to overwrite the file is displayed.
- If there is not sufficient space on the memory card, an error message is displayed.

To use a USB flash drive (in UDF and exFAT)

Connect the formatted USB flash drive to the external device connector *(page 24)*.
Select "All Save(USB)" > "Execute" in step 2.

Retrieving the Setup file

To use an SxS memory card

When you retrieve the stored setup file, the camcorder settings are changed according to the file.

1 Insert the memory card on which you stored the setup file into a card slot.

Check that the corresponding memory card icon is displayed on the screen. If a memory card in the other slot is selected, press the SLOT SELECT button to switch.

2 Select "Recall" in "Camera Data" *(page 101)* in the OTHERS menu, then select "Execute."

An in-progress message is displayed during data reading. When the read-out is completed, a completion message is displayed, indicating that the camcorder settings have been changed according to the setup file.

To use a USB flash drive (in UDF and exFAT)

Connect the formatted USB flash drive to the external device connector *(page 24)*.
Select “All Load(USB)” > “Execute” in step 2.

Resetting to the standard values

The current camcorder settings you made through various menu and button operations can be collectively returned to the standard statuses (factory settings) by executing “All Reset” of the OTHERS menu.

Planning Metadata

Planning metadata is information about shooting and recording plans, recorded in an XML file.

Example of a planning metadata file

```
<?xmlspversion="1.0"spencoding="UTF-8"?>

<PlanningMetadata
xmlns="http://xmlns.sony.net/pro/metadata/planningmetadata"
assignId="P0001" creationDate="2011-08-20T17:00:00+09:00"
lastUpdate="2011-09-28T10:30:00+09:00" load="false" version="1.00">

<Propertiesspppropertyld="assignment" update="2011-08-20T09:00:00+09:00"
modifiedBy="Chris">

<TitlespusAscii="Typhoon" xml:lang="ja">Typhoon_Strikes_Tokyo</Title>

</Properties>

</PlanningMetadata>
```

You can shoot using clip names and shot mark names defined in advance in a planning metadata file.
This camcorder can display clip names and shot mark names defined in the following languages:

- English
- Chinese
- German
- French
- Italian
- Spanish
- Dutch
- Portuguese
- Swedish
- Norwegian
- Danish
- Finnish

Notes

- If you define clip and shot mark names in languages other than those listed above, they may not be displayed on the LCD monitor/EVF screen.
- If you define clip and shot mark names in French, Dutch, or Finnish, some characters are displayed in a different but similar font.

Loading a Planning Metadata file

To record planning metadata together with clips, it is necessary to load a planning metadata file into the camcorder’s memory in advance.

To use an SxS memory card

Insert the SxS memory card with the planning metadata file (.xml) saved to the directory below into the camcorder’s card slot, then select and load the file via “Load / Slot(A)” or “Load / Slot(B)” in “Plan.Metadata” *(page 108)* of the OTHERS menu.
UDF: General/Sony/Planning
exFAT: XDROOT/General/Sony/Planning
FAT: BPAV/General/Sony/Planning

To use a USB flash drive (in UDF and exFAT)

Set “Wi-Fi&Proxy/USB” in “Network” *(page 109)* of the OTHERS menu to “USB A” in advance.

Note

“USB A” cannot be selected when “Format” in “System” *(page 105)* of the OTHERS menu is set to the following settings.

- XAVC-L50 1080/59.94P, 50P
- XAVC-L35 1080/59.94P, 50P

1 Connect a USB flash drive formatted with the FAT32 file system to the external device connector *(page 24)*.

A file list appears.

Note

The file list displays up to 64 files.
Even if the total number of planning metadata files is 64 or less, all of the planning metadata files may not appear if the directory where they are located on the USB flash drive (General/Sony/Planning) contains 512 or more files.

2 Using the up/down/left/right buttons or the jog dial, select the file which you want to load in the file list, then press the SEL/SET button or the jog dial.

Confirming the detailed information in planning metadata

After loading a planning metadata file into memory of the camcorder, you can check the details of the file, such as the filename, time and date of file creation, and the titles specified in the file.

Select “Properties” in “Plan.Metadata” *(page 108)* of the OTHERS menu, then select “Execute.”

Using the Wi-Fi connection

When connecting the unit with a computer via Wi-Fi, the file transmission can be done accessing the unit’s Web menu from a computer.

1 Launch the browser and input http://<camcorder’s IP address> *(page 109)* in the address bar.

Example: When the IP address is 192.168.1.10, input http://192.168.1.10/ in the address bar.

2 Input the user name and password, then click OK.

User name: admin
Password: (your unit’s model in lowercase; pxw-x200, as appropriate)

Clearing the loaded planning metadata

To clear the planning data loaded in the camcorder’s memory, proceed as follows:

Select “Clear” in “Plan.Metadata” *(page 108)* of the OTHERS menu, then select “Execute.”

Defining a clip name in Planning Metadata

The following two types of clip name strings can be written in a planning metadata file.

- ASCII-format name, which is displayed on the EVF screen
- UTF-8-format name, which is actually registered as the clip name

You can select the type for displaying the clip name with “Clip Name Disp” in “Plan.Metadata” *(page 108)* of the OTHERS menu.

When you specify a clip name in planning metadata, the name is displayed under the operation status indication on the EVF screen.

Example of clip name strings

Use a text editor to modify the description for the <Title> tag.

The shaded fields in the example are clip name strings. “Typhoon” is described in ASCII format (up to 44 characters).

“Typhoon_Strikes_Tokyo” is described in UTF-8 format (up to 44 bytes).

Here, “sp” indicates a space, and ↵ indicates a carriage return.

```
<?xmlsp version="1.0"sp encoding="
UTF-8"?>↵
 <PlanningMetadatasp xmlns="http://
xmlns.sony.net/pro/metadata/
planningmetadata"sp assignId="
P0001"sp creationDate="
2011-08-20T17:00:00+09:00"sp
lastUpdate="
2011-09-28T10:30:00+09:00"sp
version="1.00">↵
    <Propertiessp propertyId="
    assignment"sp update="
    2011-09-28T10:30:00+09:00"sp
    modifiedBy="Chris">↵
        <Titlesp usAscii="Typhoon"sp
        xml:lang="en">Typhoon_Strikes_Tokyo
        </Title>↵
    </Properties>↵
 </PlanningMetadata>↵
```

Notes

- When you create a file, enter each statement as a single line by breaking a line with a CRLF only after the last character of the line, and do not enter spaces except where specified with “sp.”
- A string of up to 44 bytes (or 44 characters) is valid as a clip name. If a UTF-8-format string exceeds 44 bytes, the string up to the 44th byte is used as the clip name. If only a string in ASCII format is specified, the ASCII-format name up to the 44th characters is used as the clip name. When neither the ASCII-format name string nor UTF-8-format name string is valid, a clip name in the standard format is used.

Using a clip name defined in planning metadata

Load a planning metadata file that contains the clip name into memory of the camcorder, then select “Plan” for “Auto Naming” in “Clip” *(page 106)* of the OTHERS menu.

Clip names are generated by adding an underscore (_) and a 5-digit serial number (00001 to 99999).

Example: Typhoon_Strikes_Tokyo_00001, Typhoon_Strikes_Tokyo_00002, ...

Notes

- If the serial number reaches 99999, it returns to 00001 upon the next recording.
- When you load another planning metadata file, the 5-digit serial number returns to 00001.

Defining Shot Mark names in Planning Metadata

When you record shot mark 1 or shot mark 2, you can apply a name to the shot mark, using a string defined in planning metadata.

Example of shot mark name strings

Use a text editor to modify the description for the <Meta name> tag.
The shaded fields in the example are shot mark name strings.
Names can be either in ASCII format (up to 32 characters) or UTF-8 format (up to 16 characters).
Here, “sp” indicates a space and ↵ indicates a carriage return.

Note

If a name string contains even one non-ASCII character, the maximum length of that string is limited to 16 characters.

```
<?xml sp version="1.0" sp encoding="
UTF-8"?>↵
<PlanningMetadata xmlns="http://
xmlns.sony.net/pro/metadata/
planningmetadata" sp assignId="
H00123" sp creationDate="
2011-04-15T08:00:00Z" sp lastUpdate="
2011-04-15T15:00:00Z" sp version=
"1.00">↵
 <Properties sp propertyId=
"assignment" sp class="original" sp
update="2011-04-15T15:00:00Z" sp
modifiedBy="Chris">↵
    <Title sp usAscii="Football
    Game" sp xml:lang="en">
    Football Game 15/04/2011
    </Title>↵
        <Meta sp name="_ShotMark1" sp
        content="Goal"/>↵
        <Meta sp name="_ShotMark2" sp
        content="Shoot"/>↵
    </Properties>↵
</PlanningMetadata>↵
```

Note

When you create a file, enter each statement as a single line by breaking a line with a CRLF only after the last character of the line, and do not enter spaces except where specified with “sp,” except within shot mark name strings.

Copying Planning Metadata files collectively

You can copy planning metadata files stored in the General folder on an SxS memory card collectively to another SxS memory card.
Select “General Files” in “Copy All” *(page 107)* of the OTHERS menu.

Proxy Recording

You can record proxy data on an SD card simultaneously while recording on an SxS memory card.

Usable SD Cards

SDHC memory card* (Speed Class: Higher than 4, Capacity: Up to 32 GB)
* Indicated as "SD card" in this Operating Instructions.

Formatting an SD Card

When you use an SD card with this camcorder, it must be formatted using the format function of this camcorder.
It is also necessary to format an SD card if a caution message is displayed when you mount it.

1. **In "Network" *(page 109)* of the OTHERS menu, specify "Wi-Fi&Proxy/USB" then select "Wi-Fi&Proxy."**
2. **Insert the SD card into the slot with the label facing right.**
3. **In "Proxy File" *(page 109)* of the OTHERS menu, specify "Format SD Card" then select "Execute."**

   The in-progress message and progress status are displayed. When formatting is complete, a completion message is displayed. Press the SEL/SET dial to hide the message.

Notes

- All the data is erased when an SD card is formatted, and the data cannot be restored.
- Use an SD card that is formatted in FAT32.

Checking the Remaining Time

The remaining time of an SD card can be checked on the LCD monitor/EVF screen *(page 98)*.

1. **In "Network" *(page 109)* of the OTHERS menu, specify "Wi-Fi&Proxy/USB" then select "Wi-Fi&Proxy."**
2. **Insert the SD card into the slot with the label facing right.**

To use media formatted with this camcorder in the slots of other devices
Make a backup of the media, then format it using the other device.

Performing Proxy Recording

1. **Set "Wi-Fi&Proxy/USB" in "Network" *(page 109)* of the OTHERS menu to "Wi-Fi&Proxy."**
2. **Insert the SD card into the slot with the label facing right.**
3. **Start recording.**

   When the recording on an SxS memory card is stopped, proxy recording is also stopped.

Memo

"Rec2-P" appears on the LCD monitor/EVF screen during proxy recording.

Notes

- The proxy recording does not work when "Format" in "System" of the OTHERS menu is set to the following settings.
  —exFAT:
  XAVC-L50 1080/59.94P, 50P
  XAVC-L35 1080/59.94P, 50P
  —UDF, exFAT:
  HD422 50/720/29.97P, 25P, 23.98P
  HQ 1280×720/23.98P
  DVCAM 59.94i, 50i, 29.97P, 25P
  IMX50 59.94i, 50i, 29.97P, 25P
  —FAT:
  SP 1440×1080/23.98P
  HQ 1280×720/29.97P, 25P, 23.98P
  DVCAM 59.94i, 50i, 29.97P, 25P
- The proxy recording does not work during Interval Recording, Frame Recording, Picture Cache Recording, Clip Continuous Recording, and Slow & Quick Motion.
- When performing proxy recording, set Interval Recording, Frame Recording, Picture Cache

Recording, Clip Continuous Recording, and Slow & Quick Motion to off, and set "Proxy" of the CAMERA SET menu to "On" *(page 88)*.
- Data integrity is not guaranteed if the power is turned off or an SD card is removed while it is being accessed. Data on the SD card may be destroyed. The camcorder does not have the salvage function that can recover the damaged material. Be sure that the camcorder is turned off when you remove the SD card from the camcorder. Be sure that the ACCESS lamp of the used SD card is turned off when you turn the camcorder off.
- Make sure that the SD card does not pop out when inserting or removing it.

Changing the Proxy Recording Setting

Setting the picture size

Select the picture size with "Size" in "Proxy File" *(page 109)* of the OTHERS menu.

About the Recorded File

The file system of the recorded file is FAT32, and the file extension is ".mp4."
The timecode is also recorded simultaneously.

Storage Destination of the Recorded File

The recorded file is stored under the "/PRIVATE/PXROOT/Clip" directory.

About the File Name

The file name is same as the clip name that is recorded on an SxS memory card.
When "Match Clip Name" is set to "Off," the file name generated as the timecode at the start of recording. (Example: When the recording starts at 14:30:20 05 frame, the file name will be "14_30_20_05.mp4.") If there is the file that was recorded at same time, the camcorder does not overwrite it and the serial number is added to the new file name.

Connecting to Other Device via Wireless LAN

You can make a wireless LAN connection between the camcorder and a device such as a smartphone or tablet by attaching the supplied IFU-WLM3 USB wireless LAN module.

Notes

- You cannot use a USB wireless LAN module other than the IFU-WLM3.
- You cannot make a wireless LAN connection when "Format" in "System" is set to the following settings.
  XAVC-L50 1080/59.94P, 50P
  XAVC-L35 1080/59.94P, 50P

Making a wireless LAN connection between a device and the camcorder enables you to do the following.
- Remote operation via a wireless LAN
  You can control the camcorder from a smartphone, tablet, or computer that is connected to the camcorder via the wireless LAN.
- File transferring via a wireless LAN
  You can transfer a proxy file (low resolution) that is recorded on an SD card in the camcorder or original file (high resolution) that is recorded by the camcorder to the server via the wireless LAN.
- Video/audio streaming via a wireless LAN
  You can create a stream (H.264/AAC-LC compression) from the video/audio of a camcorder, and watch the video/audio streaming by using the "Content Browser Mobile" application that is installed on a smartphone, tablet, or computer via the wireless LAN.

"Content Browser Mobile" application

You can operate the camcorder remotely while streaming the audio/video of the camcorder, and perform the settings of the camcorder by using the "Content Browser Mobile" application.

For details about the "Content Browser Mobile" application, contact your Sony dealer or a Sony service representative.

Compatible devices

You can use a smartphone, tablet, or computer for setting and operating the camcorder. Compatible devices, operating systems, and browsers are as follows.

Device	OS	Browser
Smartphone	Android 4.3	Chrome
	iOS 7	Safari
Tablet	Android 4.3	Chrome
	iOS 7	Safari
Computer	Microsoft Windows 7 SP1/ Microsoft Windows 8.1	Internet Explorer 11
	Mac OS10.7 Mac OS10.8	Safari

Attaching the IFU-WLM3

1 Open the cover of the external device connector, then attach the IFU-WLM3.

Note

Attach/remove the IFU-WLM3 while the camcorder is turned off.

Connecting with the Wireless LAN Access Point Mode

The camcorder works as an access point, and connects to a device via a wireless LAN.

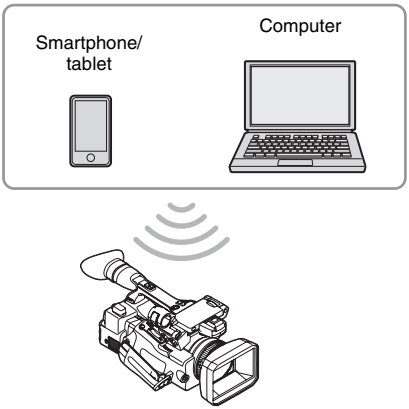

Connecting to an NFC-compatible device with one-touch operation

You can connect the camcorder to an NFC-compatible device with one-touch operation by using the NFC function.

1 Start "Settings" on the device, select "Other Settings," then mark the "NFC" checkbox.

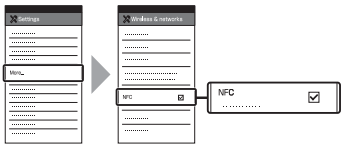

2 Turn the camcorder on.

3 Set "Wi-Fi&Proxy/USB" in "Network" *(page 109)* of the OTHERS menu to "Wi-Fi&Proxy."

Note

It may take time (for about 1 minute) until the wireless LAN function is activated.
The radio wave intensity indication on the LCD/EVF screen flashes. Wait until the radio wave intensity indication stops flashing.

4 Activate the NFC function.

Select "Execute" for "NFC" in "Network" *(page 109)* of the OTHERS menu, or press the assignable button to which "NFC" is assigned.

5 Hold the smartphone near the camcorder.

The smartphone is connected to the camcorder and "Content Browser Mobile" starts.
The "AP" indication appears on the LCD monitor/EVF screen when smartphone is connected to the camcorder.

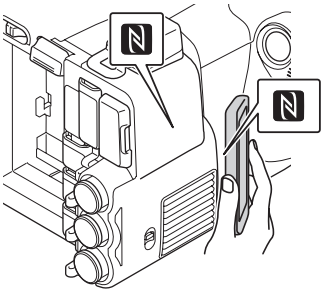

Notes

- Cancel the sleep or screen lock function of the smartphone in advance.
- Hold the device near to the camcorder without moving the device until "Content Browser Mobile" starts (1 to 2 seconds).

Connecting to a WPS-compatible device

You can connect the camcorder to a WPS-compatible device by using the WPS function.

1 Turn the camcorder on.

2 Set "Wi-Fi&Proxy/USB" in "Network" *(page 109)* of the OTHERS menu to "Wi-Fi&Proxy."

Note

It may take time (for about 1 minute) until the wireless LAN function is activated.
The radio wave intensity indication on the LCD/EVF screen flashes. Wait until the radio wave intensity indication stops flashing.

3 Set "Wi-Fi Func. Mode" in "Network" *(page 109)* of the OTHERS menu to "Access Point."

The "AP" indication appears on the LCD monitor/EVF screen.

4 Select "Execute" for "WPS" in "Network" *(page 109)* of the OTHERS menu.

5 Select "Network Setting" > "Wi-Fi Setting" on the device, then set "Wi-Fi" to on.

6 Select the camcorder's SSID from the SSID list in "Wi-Fi Network" on the device, then select "WPS Push Button" in "Option" on the device.

Notes

- The operation method differs depending on the device.
- For the SSID and password of the camcorder, check "SSID&Key" in "Network" *(page 109)* of the OTHERS menu.

7 Start the browser on the device, then access "http://192.168.1.1:8080/index.html."

The screen for inputting "User Name" and "Password" appears.
For the user name and password of the access authentication, check "User Name" and "Password" in "Network" *(page 109)* of the OTHERS menu.

8 Input the user name and password, then select "OK."

Connecting by inputting an SSID and password on a device

You can connect the camcorder to a device by inputting an SSID and password on a device.

1 Turn the camcorder on.

2 Set "Wi-Fi&Proxy/USB" in "Network" *(page 109)* of the OTHERS menu to "Wi-Fi&Proxy."

Note

It may take time (for about 1 minute) until the wireless LAN function is activated.
The radio wave intensity indication on the LCD/EVF screen flashes. Wait until the radio wave intensity indication stops flashing.

3 **Set "Wi-Fi Func. Mode" in "Network" *(page 109)* of the OTHERS menu to "Access Point."**

The "AP" indication appears on the LCD monitor/EVF screen.

4 **Select "Network Setting" > "Wi-Fi Setting" on the device, then set "Wi-Fi" to on.**

5 **Connect the device to the camcorder by selecting the camcorder's SSID from the SSID list in "Wi-Fi Network" and inputting the password on the device.**

For the SSID and password of the camcorder, check "SSID&Key" in "Network" *(page 109)* of the OTHERS menu.

Note

The operation method differs depending on the device.

6 **Start the browser on the device, then access "http://192.168.1.1:8080/index.html."**

The screen for inputting "User Name" and "Password" appears.
For the user name and password of the access authentication, check "User Name" and "Password" in "Network" *(page 109)* of the OTHERS menu.

7 **Input the user name and password, then select "OK."**

Connecting with the Wireless LAN Station Mode

The camcorder connects to an existing access point of the wireless LAN as a client. The camcorder and device connect via the access point.

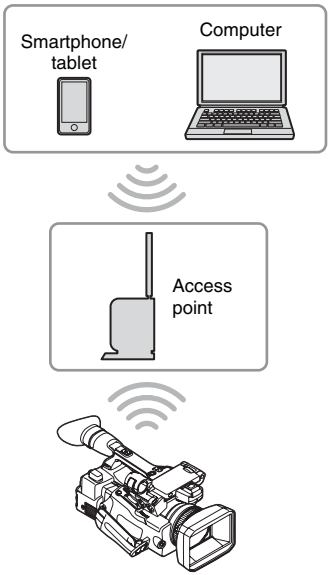

Connecting to the access point with the WPS function

If the access point is compatible with the WPS function, you can connect to the access point with simple settings. If the access point is not compatible with the WPS function, see *"To connect to the access point in the station mode without the WPS function" (page 64)*.

1 **Turn the access point on.**

2 **Turn the camcorder on.**

3 **Set "Wi-Fi&Proxy/USB" in "Network" *(page 109)* of the OTHERS menu to "Wi-Fi&Proxy."**

Note

It may take time (for about 1 minute) until the wireless LAN function is activated.

The radio wave intensity indication on the LCD/EVF screen flashes. Wait until the radio wave intensity indication stops flashing.

4 Set "Wi-Fi Func. Mode" in "Network" *(page 109)* of the OTHERS menu to "Station."

Note

It may take time (for about 1 minute) until the camcorder is in the station mode.

5 Select "Execute" for "WPS" in "Network" *(page 109)* of the OTHERS menu.

6 Press the WPS button of the access point.

For the operation of the WPS button, refer to the operating instructions of the access point. When the connection is completed, the radio wave intensity indication on the LCD/EVF screen lights at a strength of more than 1.

Note

If the connection fails, perform steps from step 1 again.

7 Connect the device to the access point.

For connecting, refer to the operating instructions of the device.

8 Start the browser on the device, then access to "http://<IP address that the access point assigns to the camcorder>:8080/index.html."

For the camcorder's IP address, check "IP Address" in "Network" *(page 109)* of the OTHERS menu.
The screen for inputting "User Name" and "Password" appears.
For the user name and password of the access authentication, check "User Name" and "Password" in "Network" *(page 109)* of the OTHERS menu.

9 Input the user name and password, then select "OK."

The Web menu of the camcorder appears on the browser. For details, see *"About the Web Menu" (page 62)*.

Uploading a File

You can upload a proxy file or original file that is recorded on the camcorder to the server on the Internet via an access point.

Preparations

To register the server for uploading

Register the server for uploading in advance.
For details about registering the server, see *"Register the server for uploading" (page 65)*.

Selecting the File and Uploading

Upload the file that is recorded on an SD card, or the original file that is recorded on an SxS memory card, to the server.

Uploading a proxy file on an SD card

1 Connect a device to the camcorder via a wireless LAN, start the browser on the device, then access the camcorder from the browser *(page 55)*.

2 Display the file list screen to select the file.

Touch "☰" > "Media Info" > "SD Card."
The "SD Card," "Slot A," or "Slot B" screen appears.
Example: "SD Card" screen

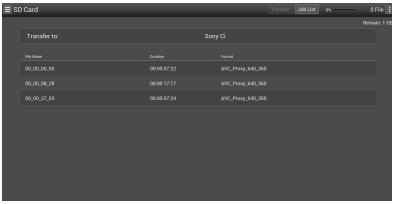

3 Select the file.

Select the file by touching the file. To cancel, touch the file again.
You can check the file by double touching the file to play back (SD card only).

4 Touch "Transfer."

The server that you set to the default server at "Default Server" in *"Register the server for uploading" (page 65)* appears.
To change the server, touch the server to display the server list, then select a server.
Input the directory for the server to "Directory" if necessary.

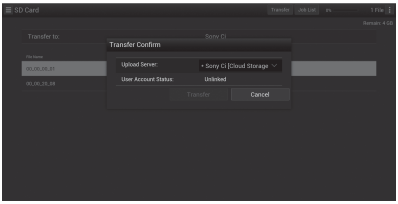

5 Touch "Transfer."

The camcorder starts uploading the selected file.
To cancel uploading, touch "Cancel."

Uploading an original file on an SxS memory card

1 Connect a device to the camcorder via a wireless LAN, start the browser on the terminal device, then access the camcorder from the browser *(page 55)*.

2 Display the file list screen to select the file.

Touch "☰" > "Media Info" > "Slot A" (for a memory card in the slot A) or "Slot B" (for a memory card in the slot B).
The "SD Card," "Slot A," or "Slot B" screen appears.

Example: "SD Card" screen

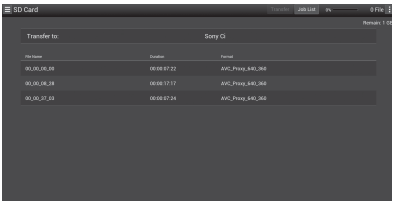

3 Select the file.

Select the file by touching the file. To cancel, touch the file again.
You can check the file by double touching the file to play back (SD card only).

4 Touch "Transfer."

The server that you set to the default server at "Default Server" in *"Register the server for uploading" (page 65)* appears.
To change the server, touch a server to display the server list, then select the server.
Input the directory for the server to "Directory" if necessary.

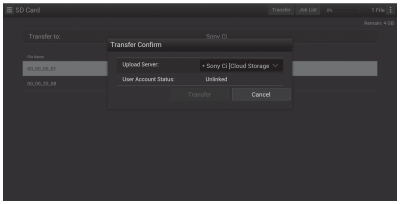

5 Touch "Transfer."

The camcorder starts uploading the selected file.
To cancel uploading, touch "Cancel."

Checking the file uploading

You can check the upload status on the "Job List" screen that is displayed by touching "Job List" on the "SD Card," "Slot A," or "Slot B" screen *(page 66)*.

Using the Wi-Fi Remote Commander

When a Wi-Fi connection is established between a device such as smartphone, tablet, PC, etc., and the camcorder, the Wi-Fi remote commander appears on the device screen and the device can be used as a remote commander.
You can start/stop recording, adjust iris/focus/zoom, etc., with a Wi-Fi connected device. This function is useful for setting the camcorder in a remote place, such as the top of a crane, etc.

Notes

- When iris is not set to auto, "IRIS" slider operation and ON/OFF setting of "Auto IRIS" are not available.
- When the focus ring is pulled rearward, "FOCUS" slider operation and ON/OFF setting of "Auto Focus" are not available.
- When the ZOOM switch is set to MANUAL, "ZOOM" slider operation is not available.

The displays of Wi-Fi remote commander

For smartphone

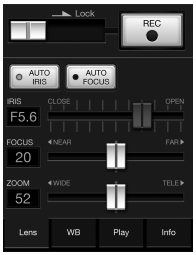

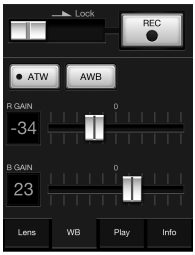

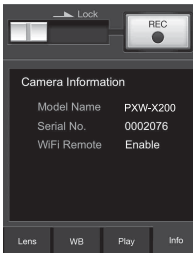

For Tablet

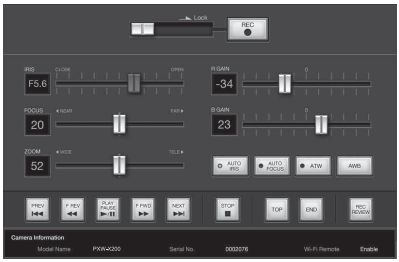

To display the Wi-Fi remote commander

To display the Wi-Fi remote commander on a device screen, settings are required on both the device and camcorder.

Camcorder settings

1 Set "Wi-Fi Remote" in "Network" *(page 109)* of the OTHERS menu to "On."

Device settings

Set the smartphone, tablet, PC, etc., to be used as the Wi-Fi remote commander.

1 Make a Wi-Fi connection between the device and camcorder *(page 55)*.

2 Launch the browser and input http://<camcorder's IP address> (refer to "IP Address" in "Network" *(page 109)* of the OTHERS menu)/rm.html.

Example: When the IP address is 192.168.1.10, input "http://192.168.1.10/rm.html" in the address bar.
The Wi-Fi remote commander will appear on the device screen when the Wi-Fi connection is established.
Thereafter operate the camcorder as shown on the screen of the Wi-Fi connected device.
The REC button becomes unavailable when the Lock switch is dragged to the right.

Notes

- Depending on the device, the Wi-Fi remote commander may not appear properly on the device's screen even though you input "http://<camcorder's IP address> *(page 109)*/rm.html" in the address bar. In this case, input "rms.html" for a smartphone or "rmt.html" for a tablet at the end of the address to display the Wi-Fi remote commander properly.
- The Wi-Fi remote commander on the device's screen may no longer match the actual status of the camcorder

in the following cases. When this happens, refresh the browser on the device.
—when the camcorder is restarted while the Wi-Fi connection is established
—when the camcorder is controlled directly while the Wi-Fi connection is established
—when the device is reconnected
—when you operate forward/backward on the device's browser.
- If the Wi-Fi signal is poor, the Wi-Fi remote commander may not work properly.

About the Web Menu

The Web menu of the camcorder appears by accessing the camcorder from the browser of a device that is connected to the camcorder via a wireless LAN. You can perform the settings for the wireless function or the operation of the file transfer.

Initial screen

When connecting the camcorder and device, and accessing the camcorder from the browser on the device, the "SD Card" screen in "Media Info" of the camcorder appears on the browser.

About the setting menu

The setting menu appears by touching ☰ at the upper left of the screen. Touch the item that you want to set.

"Device Status"
- "Short Cut"
  "Media": Short-cut button for the "SD Card" screen *(page 59)*
  "Format": Short-cut button for the "Format" screen *(page 63)*
- "Status"
  "Wireless Module": Status indication for proxy recording
  "Recording": Recording a proxy file
  "Stop": Recording is stopped
  "Remain": SD card remaining space indication
  "Warning/Error": Warning/Error indication
  ("Wxx-xxx" is a warning number. "Exx-xxx" is an error number *(page 141)*)
- "Network"
  "Wireless LAN IP Address": Camcorder's IP address
- "Hardware"
  "Serial Number": Camcorder's serial number
  "OSS Information": Copyright information

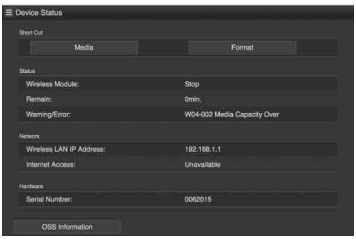

“Settings”
Displays the screen for the settings of the camcorder.
- “Wireless Module”
  “Format”: Format settings *(page 63)*
- “Wireless LAN”
  “Station Settings”: Wireless LAN settings *(page 64)*
  “Status”: Status for the wireless LAN settings *(page 64)*
- “Upload Settings”
  Upload settings *(page 65)*

Note

When the “Settings” screen is displayed, the desired setting screen appears by touching the following.

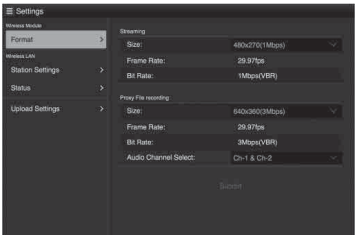

“Media Info”
Displays the screen for displaying the status of the media, or selecting the file that is uploaded *(page 59)*.
- “SD Card”: Media that is inserted into the PROXY SD slot of the camcorder.
- “Slot A”: Media that is inserted into card slot A of the camcorder.
- “Slot B”: Media that is inserted into card slot B of the camcorder.

“Job List”
Displays the screen for managing the uploaded files *(page 66)*.

“Cam Remote Control”
Displays the Wi-Fi remote commander *(page 61)*.

Format Settings

You can set the format of the proxy file that is recorded on the SD card of the camcorder or the format for the stream that is played on a device.

Video
- XAVC Proxy (AVC/H.264 Main Profile, 4:2:0 Long GOP)
- Size is selected in the following settings.

Audio
- AAC-LC compression
- Sampling frequency: 48 kHz
- Bit rate: 128 kbps for Stereo

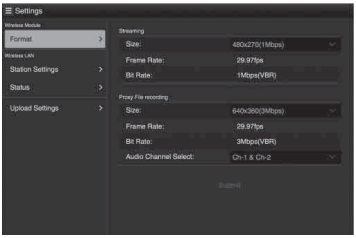

“Size” (“Streaming”)
Set the size and bit rate of the video for the stream.
“640 × 360”: 3 Mbps (VBR)
“480 × 270”: 1 Mbps (VBR)
“480 × 270”: 0.5 Mbps (VBR)

“Size” (“Proxy File recording”)
Set the size and bit rate of the video for the proxy file.
“1280 × 720”: 9 Mbps (VBR)
“640 × 360”: 3 Mbps (VBR)
“480 × 270”: 1 Mbps (VBR)
“480 × 270”: 0.5 Mbps (VBR)

Note

This bit rate is the average value. The actual bit rate may be more than the average value.

“Frame Rate”
Displays the frame rate of the video.
“23.98 fps”: 23.975 fps
“25 fps”: 25 fps
“29.97 fps”: 29.97 fps
“50 fps”: 50 fps
“59.94 fps”: 59.94 fps

Note

“24 fps” is not supported.

“Bit Rate”
Displays the bit rate of the video.
“9 Mbps (VBR)”: 1280 × 720
“3 Mbps (VBR)”: 640 × 360
“1 Mbps (VBR)”: 480 × 270
“0.5 Mbps (VBR)”: 480 × 270

“Audio Channel Select”
Selects the audio channel for recording.
“Ch-1 & Ch-2”: Audio of the channel 1 and 2 (default setting)
“Ch-3 & Ch-4”: Audio of the channel 3 and 4

Note

The left of the item name is played on the left channel, the right of the item name is played on the right channel.

Wireless LAN Settings (Station Settings)

You can perform the settings for connecting to a wireless LAN.

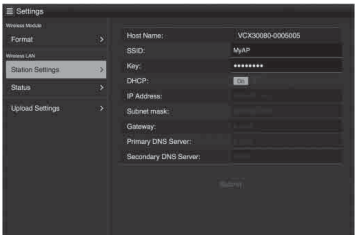

"Host Name"
Displays the host name of the camcorder. (Cannot be changed).

"SSID"
Displays the SSID that is selected at "Access Point."

"Key"
Input the password for the access point.

"DHCP"
Set the DHCP setting.
When you set to "On," the IP address is assigned to the camcorder automatically.
To assign the IP address to the camcorder manually, set to "Off."

"IP Address"
Input the IP address of the camcorder. This setting is available only when "DHCP" is set to "Off."

"Subnet mask"
Input the subnet mask of the camcorder. This setting is available only when "DHCP" is set to "Off."

"Gateway"
Input the default gateway for the access point. This setting is available only when "DHCP" is set to "Off."

"Primary DNS Server"
Input the primary DNS server for the access point. This setting is available only when "DHCP" is set to "Off."

"Secondary DNS Server"
Input the secondary DNS server for the access point. This setting is available only when "DHCP" is set to "Off."

"Submit"
Confirms the wireless LAN settings.

To connect to the access point in the station mode without the WPS function

1. **Connect the device to the camcorder in the access point mode *(page 56)*.**

2. **Set the items on the "Station Settings" screen.**

   Perform settings in accordance with the access point settings.
   For details about the access point settings, see the operating instructions of the access point.

3. **Touch "Submit."**

   The set items are confirmed.

4. **Set the camcorder's wireless LAN operation mode to the station mode by setting "Wi-Fi Func. Mode" in "Network" of the OTHERS menu to "Station."**

   The camcorder starts connecting in the station mode. Access the camcorder from the device by performing procedure from step 8 of *"Connecting to the access point with the WPS function" (page 58)*.

Checking the wireless LAN settings

Display the screen for checking the wireless LAN settings by touching "Wireless LAN" > "Status." The displayed items differ depending on the wireless LAN mode of the camcorder.

Access point mode

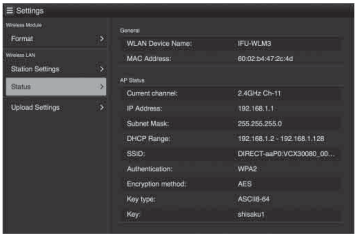

Station mode

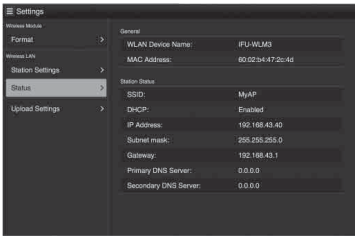

Upload Settings

You can register the server for uploading a proxy file or an original file that is recorded on the camcorder, or change the server setting that is registered.

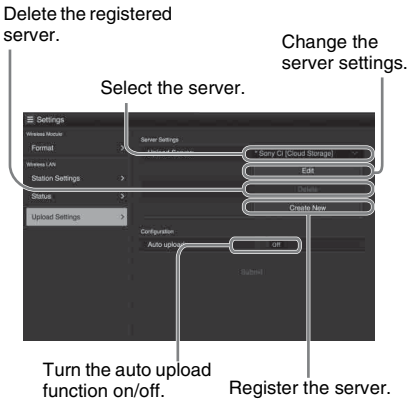

"Auto Upload On/Off"

When "Auto Upload On/Off" is set to "On" and the camcorder is connected to the Internet, the camcorder automatically uploads a proxy file to the server that is set to the default server at "Upload Setting" after recording.

"Sony Ci" is set for the server as the default. Sony Ci is "Media Cloud Services" that is provided by Sony. You can upload files to the Sony cloud service, Sony Ci.

Note

To use Sony Ci, registration is required.
For more details, please visit www.SonyMCS.com/wireless

To register "Sony Ci"

1 Make sure that "Sony Ci" is displayed on the "Upload Settings" screen, then touch "Edit."

The setting screen for Sony Ci appears.

2 Input the user name in "User" and password in "Password."

For more details, please visit www.SonyMCS.com/wireless

3 Touch "Link."

After a few moments, the completion message appears.

Note

"Link" is the operation to associate the user with the camcorder. To perform "Link," you need to connect the camcorder to the Internet.

4 Touch "OK."

Note

After registering with Sony Ci, "Unlink" will appear on the setting screen. If you touch "Unlink," the current user account will be unlinked, and you can link with a different user account.

Register the server for uploading

The setting screen appears by touching "Create New."

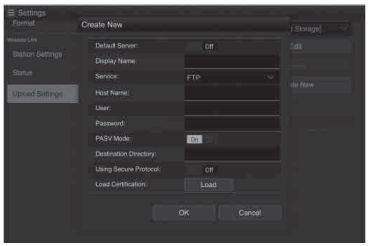

The setting is applied by touching “OK.” To cancel, touch “Cancel.”

“Default Server”
When you set to “On,” the server takes priority for displaying the server name on the list when uploading.

“Display Name”
Input the server name that is displayed on the list.

“Service”
Displays the server type.
“FTP”: FTP server

“Host Name”
Input the address of the server.

“User”
Input the user name of the server.

“Password”
Input the password of the server.

“PASV Mode”
Turn the PASV mode on/off.

“Destination Directory”
Specify the directory for uploading.

“Using Secure Protocol”
Set whether to perform secure FTP uploading.

“Load Certification”
Reads the CA certificate.
* Format the certificate that is read in PEM format and store it on the root directory of an SD card with the file name, “certification.pem.”

“Clear Certification”
Clear the CA certificate.

Changing the registered server settings

Touch “Edit” after selecting the server for which you want to change the settings on the “Upload Settings” screen. Change the settings on the screen for changing the settings.
For details about the setting items, see *“Register the server for uploading” (page 65)*.

Deleting the registered server

Touch “Delete” after selecting the server that you want to delete on the “Upload Settings” screen. When the confirmation screen appears, touch “OK.” The selected server is deleted and the display returns to the previous screen.

Checking the File Transferring (Job List)

You can check the list of the files to be uploaded, the file that is being uploaded, cancel or start the file upload, and delete the file from the file list. The camcorder is compatible with the FTP resume function (re-upload function for a file whose transfer was suspended).

- “Total”: Progress of all the files to be uploaded.
- “Status”: Progress of the file that is currently being uploaded.
- “Remain Time”: Estimated remaining time for uploading.
- “Transfer data rate”: Transfer rate indication.

To cancel or start uploading, or delete a file from the file list

1 Select the file on the list.

2 Touch ⋮ at the upper right of the screen.

Select the item.
- “Abort selected”: Cancels uploading the selected file.
- “Delete from list”: Deletes the selected file from the list.
- “Start selected”: Starts uploading the selected file.
- “Select All”: Selects all files on the list.
- “Clear completed”: Deletes the list of all the uploaded files.

Error/Warning Indicator

If the camcorder detects an error on the device that is connected via wireless LAN, the error message appears on the "Device Status" screen *(page 62)*.

Type	Error/ warning ID	Description
Hard	E01-003	Device Error
	E01-004	3G/4G Device Error
	E01-005	Firmware update error
AV Communication	E02-002	SDI Signal Error
	E03-001	Communication Error
	E03-002	Not supported device
	E03-003	File Transfer Error
	E03-004	Firmware update error
	E03-005	Authentication failed*
Media	W04-001	No Media
	W04-002	Media Capacity Over
	E04-003	Read Error
	E04-004	Write Error (other than Media Capacity Over)
	W04-005	Locked Media
	W04-006	Media Full (reached to 600 clips)
	E04-007	Not supported media

* Sony Ci authentication is expired, or FTP server authentication failed.

Thumbnail Screens

When you press the THUMBNAIL button *(page 9)*, clips recorded on the SxS memory card are displayed as thumbnails on the screen. If no clips are recorded on the card, a no-clip message is displayed.
You can start playback from the clip selected on the thumbnail screen. The playback picture can be seen on the LCD monitor/EVF and external monitors.
Press the STOP/CAM button *(page 9)* to exit the thumbnail screen and return to the recording screen.

Note

Even if the SxS memory card contains a mixture of HD and SD clips, the normal thumbnail screen shows only clips of the mode selected in "HD/SD" in "System" *(page 105)* of the OTHERS menu.
To display all recorded clips regardless of the HD/SD Mode, switch the screen to the All-Clip thumbnail screen *(page 69)*.

Configuration of the Thumbnail Screen

Data for the clip selected with the cursor are displayed at the bottom of the screen.

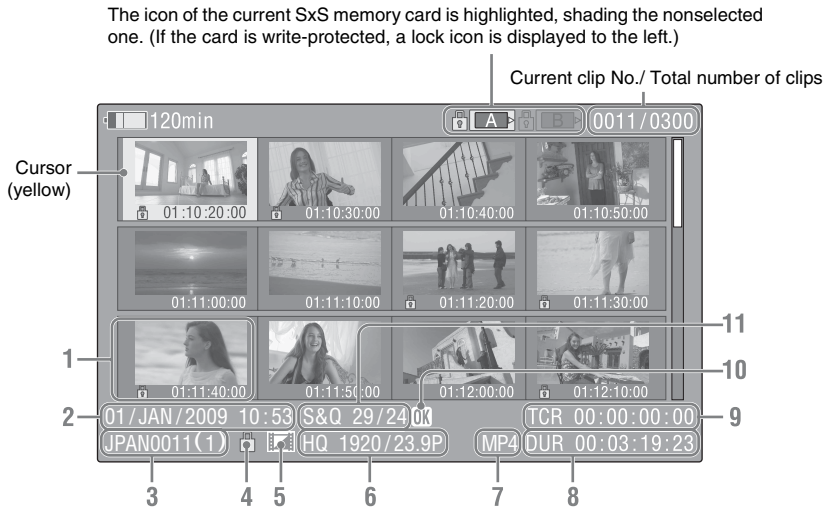

1. **Thumbnail**
   In UDF, exFAT, and FAT HD Mode: The thumbnail image for each clip is an index frame from the clip. When recording, the first frame of a clip is automatically set as the index frame. This frame can be adjusted *(page 77)*. If the clip is locked or is set with an OK mark, the lock mark is displayed.
   In FAT SD mode: The thumbnail image for each clip is the first frame of the clip. If the file was split into multiple parts because its file size exceeded 2 GB, the take mark is displayed. Split files can be viewed via the EXPAND CLIP screen *(page 75)*.
2. **Date and starting time of recording**
3. **Clip name**
   In FAT SD Mode, if the file was split into multiple parts because its file size exceeded 2 GB, the segment number is displayed after the name, separated with a slash.

4. **Lock mark (UDF, exFAT, and FAT HD Mode)**
   UDF and exFAT: A lock mark appears if the selected clip is locked.
   FAT HD Mode: A lock mark appears if the selected clip has an OK mark.
5. **AV independent file icon (UDF, exFAT, and FAT HD Mode)**
   Displayed only if the selected clip is an AV independent file. This indicates that not all operations and indications may be available, because the clip may have been added manually to the SxS file via a computer, etc., and there is no management file for it.
6. **Recording video format**
7. **File format**
   The file format (MXF, MP4, AVI) of the selected clip is displayed. (This item is not indicated when the recording mode is UDF HD Mode or exFAT HD.)
8. **Duration of the clip**
9. **Timecode**
   The timecode of the index frame is displayed.
10. **OK/NG/KP mark (UDF, exFAT, and FAT HD Mode)**
    UDF and exFAT: The mark is displayed if the selected clip has an OK/NG/KP flag.
    FAT HD Mode: The OK mark is displayed if the selected clip has an OK mark.
11. **Special recording information (UDF, exFAT, and FAT HD Mode)**
    If the selected clip was recorded in a special recording mode (Slow & Quick Motion, Interval Recording, or Frame Recording), the mode is displayed.
    Clips recorded in Slow & Quick Motion display the "Recording frame rate/playback frame rate fps" to the right.

Changing the Type of Thumbnail Screen

The type of thumbnail screen can be changed as follows by pressing the THUMBNAIL button *(page 9)*.

UDF, exFAT

The normal thumbnail screen, OK/NG/KP/None clip thumbnail screen, and All-Clip thumbnail screen are cyclically displayed.

FAT HD Mode

The normal thumbnail screen, OK clip thumbnail screen, and All-Clip thumbnail screen are cyclically displayed.

FAT SD Mode

The normal thumbnail screen and All-Clip thumbnail screen are alternately displayed.

OK/NG/KP/None-Clip thumbnail screen

Only the clips flagged OK/NG/KP—or clips with no flag ("None")—among the clips on the current SxS memory card are displayed.
You can select the type of flag to display with "Filter Clips" in "Clip" *(page 106)* of the OTHERS menu.

OK-Clip thumbnail screen

Only the clips marked OK among the clips on the current SxS memory card are displayed.

All-Clip thumbnail screen

The All-Clip thumbnail screen shows all clips on the current SxS memory card regardless of the HD or SD Mode, permitting you to check whether the card contains any clips of another mode than that currently selected.

Note

You cannot start playback from the All-Clip thumbnail screen.
Press the THUMBNAIL button again to return to the normal thumbnail screen, and playback and clip operations are enabled.

Switching the SxS memory cards

When two memory cards are loaded, press the SLOT SELECT button *(page 11)* to switch memory cards.

Note

Card switching is enabled only when the thumbnail screen is displayed or when an external input picture is displayed by pressing the STOP/CAM button.
You cannot switch memory cards during playback.
Continuous playback of cards in slots A and B is not possible.

Playing Clips

For playback operations, use the playback control buttons on the handle *(page 9)*. When the IR Remote Commander is enabled, you can use its playback control buttons instead *(page 19)*.

Playing the Selected and Subsequent Clips in Sequence

1 Using the up/down/left/right buttons or the jog dial, move the cursor to the thumbnail image of the clip with which you wish to start playback.

2 Press the PLAY/PAUSE button.

Playback starts from the beginning of the selected clip.

Notes

- The playback picture may be momentarily distorted or frozen between clips. The playback control buttons and THUMBNAIL button do not function during this condition.
- When you select a clip on the thumbnail screen and start playback, the playback picture at the beginning of the clip may be distorted. To start playback without distortion, once pause playback after starting it, press the PREV button to return to the top of the clip, then restart playback.

Information displayed on the playback screen

The following information is superimposed on the playback picture.

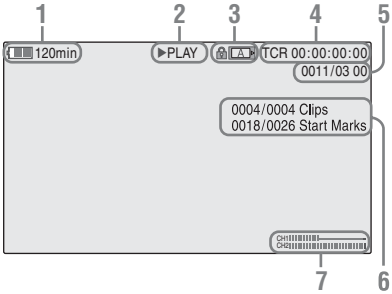

1. **Battery remaining/DC IN voltage**
2. **Playback mode**
3. **SxS memory card**
   A 🔒 mark appears to the left if the SxS memory card is write-protected.
4. **Time data**
   The time data for the playback picture are displayed. Each time you press the DURATION/TC/U-BIT button, the indication is switched between timecode (TCR) and user-bit (UB) data.
5. **Clip no./total number of clips**
   This is displayed for FAT. It is also displayed for UDF and exFAT if "Find Mode" in "Clip" *(page 106)* of the OTHERS menu is set to "Clip."
6. **Clip no./total number of clips, essence mark no./total number of essence marks**
   This is displayed for UDF and exFAT if "Find Mode" in "Clip" *(page 106)* of the OTHERS menu is set to "Rec Start."
7. **Audio levels**
   The audio levels for the recording are displayed.

Monitoring Audio

In Normal playback mode, you can monitor the recorded audio signals through the built-in speaker *(page 8)* or connected headphones.
With the headphones connected to the headphone connector *(page 7)*, the built-in speaker is turned off.
Press the VOLUME buttons *(page 9)* to adjust the sound volume.
You can select audio channel(s) to be monitored with "Audio Output" *(page 92)* of the AUDIO SET menu.

Cueing Up

To start playback from the top of the first clip

Press the PREV button and F REV button simultaneously. The top of the first-recorded clip on the memory card is cued up.

To start playback from the top of the last clip

Press the F FWD button and NEXT button simultaneously. The top of the last-recorded clip on the memory card is cued up.

Adding Shot Marks During Playback (UDF, exFAT, and FAT HD Mode)

In the same manner as in recording, you can add shot marks to the clip during playback.

At the point where you wish to add a shot mark, press the "Shot Mark1" or "Shot Mark2" assigned button.

Notes

- No shot mark can be added if the memory card is write-protected.
- No shot mark can be added to the first or last frame of a clip.

Clip Operations

During thumbnail screen playback, etc., you can operate the clips or confirm and change the subsidiary data for clips using the Clip Operation menus. The corresponding Clip Operation menu pops up on the screens as shown below when you press the SEL/SET button or the jog dial.

Clip Operation Menus

Thumbnail screen ***(page 72)***

- CANCEL
- DISP CLIP INFO
- OK MARK ADD (FAT only)
- OK MARK DELETE (FAT only)
- OK FLAG ADD (UDF and exFAT)
- NG FLAG ADD (UDF and exFAT)
- KEEP FLAG ADD (UDF and exFAT)
- CLIP FLAG DELETE (UDF and exFAT)
- LOCK CLIP (UDF and exFAT)
- UNLOCK CLIP (UDF and exFAT)
- COPY CLIP
- DELETE CLIP
- ALL MARKS
- SHOT MARK1
- SHOT MARK2
- REC START MARK (UDF and exFAT)
- EXPAND CLIP

Expand Clip screen *(page 76)*

- CANCEL
- EXPAND (COARSE)
- EXPAND (FINE)
- PAUSE
- SET INDEX PIC
- SHOT MARK1 ADD
- SHOT MARK2 ADD
- SHOT MARK1 DEL
- SHOT MARK2 DEL
- DIVIDE CLIP (FAT only)

Shot Mark screen *(page 77)*

- CANCEL
- PAUSE
- SET INDEX PIC
- SHOT MARK1 DEL
- SHOT MARK2 DEL
- DIVIDE CLIP (FAT only)

Note

Selectable menu items are limited in SD Mode.

Basic Operations of the Clip Operation Menus

Use the up/down/left/right buttons or the jog dial to select a menu item, then press the SEL/SET button or the jog dial.
Pressing the CANCEL button restores the previous condition.
Selecting “CANCEL” from a Clip Operation menu turns the Clip Operation menu off.

Notes

- When the SxS memory card is write-protected, some operations are unavailable.
- There may be items that cannot be selected depending on the status when the menu is displayed.

Clip Operation menu on the thumbnail screen

Pressing the SEL/SET button or the jog dial with the thumbnail screen *(page 68)* displayed calls the Clip Operation menu for the clip at the cursor.

Item	Function
DISP CLIP INFO	Displays the clip's information screen *(page 73)*.
OK MARK ADD 1)	Adds an OK mark *(page 74)*.
OK MARK DELETE 1)	Deletes the OK mark *(page 74)*.
OK FLAG ADD 2)	Adds an OK flag *(page 74)*.
NG FLAG ADD 2)	Adds a NG flag *(page 74)*.
KEEP FLAG ADD 2)	Adds a KP flag *(page 74)*.
CLIP FLAG DELETE 2)	Deletes the flag *(page 74)*.
LOCK CLIP 2)	Locks and protects a clip *(page 74)*.
UNLOCK CLIP 2)	Unlocks a protected clip *(page 74)*.
COPY CLIP	Copies the clip to another SxS memory card *(page 74)*.
DELETE CLIP	Deletes the clip *(page 75)*.
ALL MARKS 3)	Displays thumbnails of all frames with an essence mark recorded *(page 76)*.
SHOT MARK1 3)	Displays only thumbnails of frames with shot mark 1 recorded *(page 76)*.
SHOT MARK2 3)	Displays only thumbnails of frames with shot mark 2 recorded *(page 76)*.
REC START MARK	Displays thumbnails of frames with a Recording Start mark and the first frames of clips without Recording Start marks *(page 76)*.
EXPAND CLIP	Switches to the EXPAND CLIP screen *(page 75)*.

1) Effective with FAT HD Mode only.
2) Effective with UDF and exFAT only.
3) Effective with UDF, exFAT, and FAT HD Mode.

Displaying the Detailed Information of a Clip

Select “DISP CLIP INFO” from a Clip Operation menu.

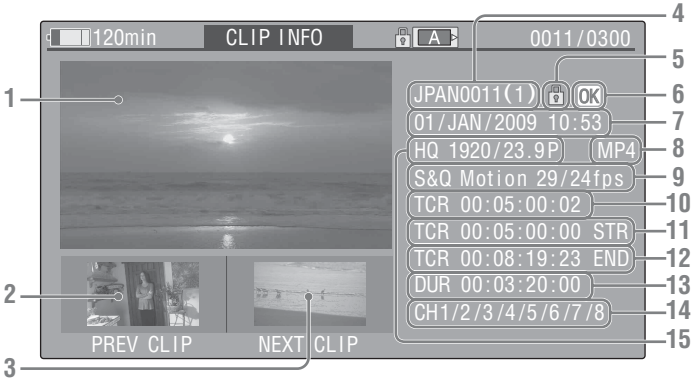

1. **Image of the current clip**
2. **Image of the previous clip**
   Press the PREV button to switch to the clip info screen of the previous clip.
   In FAT SD Mode, the previous segment of a segmented clip is displayed.
3. **Image of the next clip**
   Press the NEXT button to switch to the clip info screen of the next clip.
   In FAT SD Mode, the next segment of a segmented clip is displayed.
4. **Clip name**
   For a clip name of 12 characters or longer, only the first 5 and last 5 characters of the name are displayed. To check the non-displayed block of the name, press the jog dial or the SEL/SET button to display the entire clip name (Long-Display mode). Press the jog dial or the SEL/SET button again to cancel Long-Display mode. Long-Display mode is also canceled by switching to the previous or next clip with the PREV or NEXT button.
   In FAT SD Mode, if the file was split into multiple parts because its file size exceeded 2 GB, the segment number is displayed after the name, separated with a slash.
5. **Lock mark (UDF, exFAT, and FAT HD Mode)**
   UDF and exFAT: A lock mark appears if the selected clip is locked.
   FAT HD Mode: A lock mark appears if the selected clip has an OK mark.
6. **OK/NG/KP mark (UDF, exFAT, and FAT HD Mode)**
   UDF and exFAT: The mark is displayed if the selected clip has an OK/NG/KP flag.
   FAT HD Mode: The OK mark is displayed if the selected clip has an OK mark.
7. **Date and starting time of recording**
8. **File format**
   The file format (MXF, MP4, AVI) of the selected clip is displayed.
9. **Special recording information (UDF, exFAT, and FAT HD Mode)**
   If the selected clip was recorded in a special recording mode (Slow & Quick Motion, Interval Recording, or Frame Recording), the mode is displayed.
   Clips recorded in Slow & Quick Motion display the “Recording frame rate/playback frame rate fps” to the right.
10. **Timecode of the displayed frame**
11. **Timecode at the recording starting point**
12. **Timecode at the recording ending point**
13. **Duration of the clip**
14. **Recorded audio channels**
15. **Recorded video format**

Adding/Deleting a Flag (UDF and exFAT)

You can add an OK/NG/KP flag to clips recorded in UDF or exFAT. By adding flags, you can set the camcorder to display only clips with certain flag settings on the thumbnail screen (OK/NG/KP/None-Clip thumbnail screen) *(page 69)*.
When adding a flag, you can select from OK FLAG ADD, NG FLAG ADD, and KEEP FLAG ADD in the Clip Operation menu *(page 72)* on the thumbnail screen. When deleting a flag, select CLIP FLAG DELETE.

Note

Flagged clips are not protected. To protect clips from deletion, select LOCK CLIP in the Clip Operation menu *(page 72)* on the thumbnail screen. To remove the protection, select UNLOCK CLIP.

Adding/Deleting the OK Mark (FAT HD Mode Only)

By adding an OK mark to clips recorded in FAT HD Mode, you can set the camcorder to display only the necessary clips on the thumbnail screen *(page 69)*. Clips with an OK mark added are blocked from being deleted or segmented. To delete or segment them, remove the OK mark.
From the thumbnail screen Clip Operation menu *(page 72)*, you can select OK MARK ADD to add an OK mark, or OK MARK DELETE to delete the OK mark.

Copying Clips

You can copy clips on an SxS memory card to another SxS memory card.
Each clip is copied with the same name to the destination SxS memory card.

Notes

- If there is another clip having the same name on the destination SxS memory card, the clip is copied under a name adding a single-digit number in parentheses to the end of the original clip name.
  The parenthetical number is the minimum value that does not exist in the destination memory card.
  Examples:
  ABCD0002(1) if ABCD0002 exists
  ABCD0002(2) if ABCD0002(1) exists
  ABCD0005(4) if ABCD0005(3) exists
- When using FAT, you cannot copy a file 10 times or more if clips with the same clip name followed by parenthetical numbers (1) to (9) already exist on the card.
- When using UDF or exFAT, you cannot copy a file 1000 times or more if clips with the same clip name followed by parenthetical numbers (1) to (999) already exist on the card.
- A warning message is displayed if there is not sufficient space on the destination SxS memory card. Replace the SxS memory card with one with sufficient space.
- When copying an SxS memory card on which multiple clips have been recorded, copying all clips to the end may not be achieved, even if the destination card has the same capacity as the source card, depending on usage conditions, memory characteristics, etc.

Copying a specified clip

You can copy a clip selected on the thumbnail screen to another SxS memory card.
Select “COPY CLIP” from the Clip Operation menu.

Copying clips collectively

By using the Setup menu, you can copy clips on an SxS memory card collectively to another SxS memory card.
If the memory card contains clips of both HD and SD Mode, only the clips of the currently selected mode are copied. This may be convenient when you wish to extract clips of the same mode only.
Select “Clips” in “Copy All” *(page 107)* of the OTHERS menu.

Deleting Clips

You can delete clips from the SxS memory card. Select "DELETE CLIP" from the Clip Operation menu.

Note

Clips with an OK mark and flagged clips set to LOCK CLIP cannot be deleted.
To delete them, release the OK mark or the LOCK CLIP setting before performing the delete operation.

Deleting clips collectively

By using the Setup menu, you can delete clips from an SxS memory card collectively.
Select "All Clips DEL" in "Clip" *(page 106)* of the OTHERS menu.

Notes

- If the memory card contains clips of both HD and SD Mode, only the clips of the currently selected mode are deleted.
- Clips with an OK mark and flagged clips set to LOCK CLIP cannot be deleted.

Displaying the EXPAND CLIP Screen

In UDF, exFAT, and FAT HD Mode, the EXPAND CLIP screen permits you to divide a clip into 12 blocks of equal duration and show a thumbnail image of the first frame of each block on the screen.
In FAT SD Mode, the EXPAND CLIP screen shows the thumbnail images of the first frames of the segment files only for a clip segmented because its file size exceeded 2 GB.
This helps you to quickly cue up to a desired scene in a clip of long duration.
You can display the EXPAND CLIP screen by selecting the clip on the thumbnail screen.

1 Select a clip on the thumbnail screen, then press the SEL/SET button or the jog dial.

The corresponding Clip Operation menu pops up.

2 Select "EXPAND CLIP."

The EXPAND CLIP screen appears for the clip that you selected on the thumbnail screen.

EXPAND CLIP screen in UDF, exFAT, and FAT HD Mode

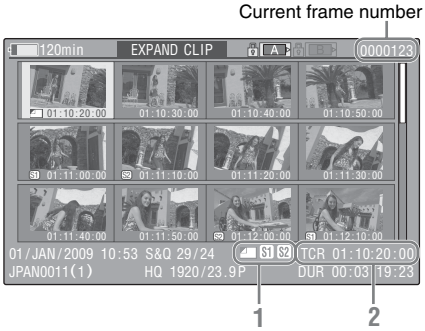

Detailed information for the clip is displayed at the bottom of the screen.
The items other than the following are the same as those on the normal thumbnail screen *(page 68)*:

1. **Frame information**
   The following icons show the marking for the frame at the cursor.

	Index frame
S1	Frame with shot mark 1 added
S2	Frame with shot mark 2 added

   The same icons may also be displayed below the thumbnail image of each frame. If the frame has multiple markings, one of the icons is displayed, in the priority order of index frame, shot mark 1, and shot mark 2.

2. **Timecode indication**
   The timecode of the frame at the cursor is displayed.

EXPAND CLIP screen in FAT SD Mode

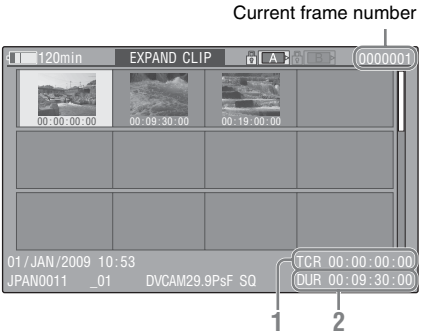

Detailed information for the clip is displayed at the bottom of the screen.
The items other than the following are the same as those on the normal thumbnail screen *(page 68)*:

1. **Timecode indication**
   The timecode of the segmentation file at the cursor is displayed.
2. **Duration**
   The duration of the segmentation file at the cursor is displayed.

Clip Operation menu on the EXPAND CLIP screen

UDF, exFAT, and FAT HD Mode

When you select a frame on the EXPAND CLIP screen and press the SEL/SET button or the jog dial, the Clip Operation menu pops up to enable operations such as displaying more detailed split displays and saving the frames after the selected frame as different clip.

Item	Function
EXPAND (COARSE)	To decrease the number of partitions of the clip
EXPAND (FINE)	To increase the number of partitions of the clip
PAUSE	To set to Pause mode at the selected frame
SET INDEX PIC	To specify the selected frame for the index frame of the clip *(page 77)*
SHOT MARK1 ADD	To add shot mark 1 to the selected frame *(page 77)*
SHOT MARK2 ADD	To add shot mark 2 to the selected frame *(page 77)*
SHOT MARK1 DEL	To delete shot mark 1 from the selected frame *(page 77)*
SHOT MARK2 DEL	To delete shot mark 2 from the selected frame *(page 77)*
DIVIDE CLIP	To divide the clip into two clips at the selected frame *(page 77)*

FAT SD Mode

You can select “PAUSE” only on the EXPAND CLIP screen in FAT SD Mode.

Displaying the SHOT MARK Screen (UDF, exFAT, and FAT HD Mode)

When one or more shot marks or recording start marks are recorded for a single clip, you can display only frames with those marks as thumbnail images on the screen.

1 Select a clip on the thumbnail screen, then press the SEL/SET button or the jog dial.

2 Select ALL MARK, SHOT MARK1, SHOT MARK2, or REC START MARK from the Clip Operation menu *(page 72)*.

SHOT MARK screen example (when ALL MARKS is selected)

The detailed information of the clip is displayed at the bottom of the screen.
The items other than the following are the same as those on the EXPAND CLIP screen *(page 75)* in UDF, exFAT, and FAT HD mode:

1. **Timecode indication**
   The timecode of the frame at the cursor on the SHOT MARK screen is displayed.

Move the cursor to the first/last frame

When the cursor is at a user-designated position, press the F REV and PREV buttons simultaneously to move the cursor the first frame. Press the F FWD and NEXT buttons simultaneously to move the cursor to the last frame.

Switch to the clip shot mark screen for a different clip

When the cursor is at the first frame for a clip, press the PREV or up button, or turn the jog dial up to switch to the previous displayable clip shot mark screen.
When the cursor is at the last frame for a clip, press the NEXT or down button, or turn the jog dial down to switch to the next displayable clip shot mark screen.

Clip Operation menu on the SHOT MARK screen

When you select a frame on the SHOT MARK screen and press the SEL/SET button or the jog dial, the Clip Operation menu pops up to permit you further operations.

Item	Function
PAUSE	To set to Pause mode at the selected frame
SET INDEX PIC	To specify the selected frame for the index frame of the clip *(page 77)*
SHOT MARK1 DEL	To delete the shot mark 1 from the selected frame *(page 77)*
SHOT MARK2 DEL	To delete the shot mark 2 from the selected frame *(page 77)*
DIVIDE CLIP	To divide the clip into two clips at the selected frame *(page 77)* (FAT HD mode Only)

Adding/Deleting Shot Marks (UDF, exFAT, and FAT HD Mode)

Adding a shot mark in Pause mode

Select “SHOT MARK1 ADD” or “SHOT MARK2 ADD” from the Clip Operation menu.

Adding a shot mark on the EXPAND CLIP screen

Select “SHOT MARK1 ADD” or “SHOT MARK2 ADD” from the Clip Operation menu.

Deleting a shot mark

You can delete shot marks on the EXPAND CLIP screen *(page 75)* or on the SHOT MARK screen *(page 76)*.
Select “SHOT MARK1 DEL” or “SHOT MARK2 DEL” from the Clip Operation menu.

Changing the Index Frame (UDF, exFAT, and FAT HD Mode)

You can change the index frame to another frame you selected on the EXPAND CLIP screen *(page 75)* or the SHOT MARK screen *(page 76)*.
Select “SET INDEX PIC” from the Clip Operation menu.

Note

Even if you specify a frame other than the top frame for the index frame, playback always begins from the top frame when you start it from the thumbnail screen.

Dividing a Clip (FAT HD Mode Only)

In FAT HD Mode, you can divide a clip into two different clips at the frame you select on the EXPAND CLIP screen *(page 75)* or the SHOT MARK screen *(page 76)*.
Select “DIVIDE CLIP” from the Clip Operation menu.
The first 4 characters of the original clip name are carried on, continuing to the last number on the memory card by the second 4 numerics.
Example: If you divide a clip named ABCD0002 into two clips under the condition where a new clip will be named EFGH0100, clip ABCD0100 and clip ABCD0101 are created.

Note

If the remaining space on the memory card is insufficient for divided clips, a message informing you of it appears.

Showing the Status Screens

Press the STATUS button *(page 9)* to display status screens on the LCD monitor/EVF screen/ external video monitor.
Use the up/down buttons *(page 9)* or the jog dial *(page 10)* to perform operations and switch the screens in sequence.
When you press the STATUS button again, the status screen display is canceled.

For connections of an external monitor, see "Connecting External Monitors and Recording Devices" on page 111.

Camera Status Screen

White Bal: White balance status

Display	Contents
B	The color temperature stored in white memory B is indicated.
A	The color temperature stored in white memory A is indicated.
PRST	The color temperature set as the preset white is indicated. The color temperature of preset white can be changed using the PICTURE PROFILE menu.

Gain: GAIN switch settings

The gain values of the positions L, M, and H of the GAIN switch assigned of the CAMERA SET menu are displayed.

Handle Zoom Speed: Handle zoom speed settings

The zoom speed that is set at "High"/"Low" of "Zoom Speed" *(page 86)* of the CAMERA SET menu are displayed.

Display	Contents
L	Zoom speed that is set at "Low" of "Zoom Speed."
H	Zoom speed that is set at "High" of "Zoom Speed."

Zebra: Zebra status

Display	Contents
1	"On" is displayed and the setting of "Zebra1 Level" in "Zebra" of the LCD/VF SET menu is displayed to the right when "Zebra Select" in "Zebra" of the LCD/VF SET menu is set to "1" or "Both" and you set the Zebra function to "On." If the Zebra function is set to "Off" or "Zebra Select" is set to "2," "Off" appears.
2	"On" is displayed when "Zebra Select" in "Zebra" of the LCD/VF SET menu is set to "2" or "Both" and you set the Zebra function to "On." If the Zebra function is set to "Off" or "Zebra Select" is set to "1," "Off" appears.

Skin Tone Detail: Skin-tone detail status

The current status (On or Off) of "Setting" of "Skin Tone Detail" of the PICTURE PROFILE menu is displayed.

Picture Profile: Picture Profile selection status

The selected Picture Profile number and name are displayed. (If Picture Profile is off, "Off" is displayed.)

Audio Status Screen

Output CH: External output/headphone output

Depending on the setting of "Output CH" in "Audio Output" of the AUDIO SET menu and the setting of "Monitor CH," the audio channel(s) external output and headphones output is displayed as follows.

- CH-1: When left/right are CH-1
- CH-2: When left/right are CH-2
- CH-3: When left/right are CH-3
- CH-4: When left/right are CH-4
- CH-1/CH-2: When left is CH-1 and right is CH-2 (stereo)
- CH-3/CH-4: When left is CH-3 and right is CH-4 (stereo)
- CH-1+CH-2: When both left and right are CH-1 and CH-2 (monaural)
- CH-3+CH-4: When both left and right are CH-3 and CH-4 (monaural)

Speaker: Speaker output

The audio channel(s) output to the internal speaker is displayed.
As the speaker is monaural, CH-1+CH-2 or CH-3+CH-4 is displayed when "Monitor CH" is set to stereo. With non-stereo settings, the setting of "Monitor CH" in "Audio Output" of the AUDIO SET menu is displayed as it is.

CH-1/CH-2/CH-3/CH-4: Audio level meters

The 4-channel audio level meters (2 meters when using 2-channel settings) and input source are displayed.
While recording (or standing by to record), the level of the audio inputs (the EE audio levels) are displayed. During playback, the audio playback level is displayed according to the setting of "Output CH" in "Audio Output" of the AUDIO SET menu.
If audio is input from the i.LINK (HDV/DV) connector while displaying thumbnails, while playback is stopped, or while recording an external signal, the audio input level is displayed. In this case, the leftmost channels that are displayed are CH-1 and CH-2, regardless of the setting of "Output CH" in "Audio Output" of the AUDIO SET menu.

Wind Filter

The "On"/"Off" setting of Wind Filter is displayed to the right of each input source. Wind Filter settings can be made from "Wind Filter CH1" to "Wind Filter CH4" in "Audio Input" of the AUDIO SET menu.

Video Status Screen

Video Format

Video Format: Video format setting
The number of vertical lines, frame rate, and scan format (i/P) of the video format set in "Format" in "System" of the OTHERS menu are displayed.

Rec Mode: Recording bit rate

The video format set in "Format" in "System" of the OTHERS menu is displayed.

3G SDI OUT Level: Data mapping method of the 3G SDI signal

The data mapping method of the 3G SDI signal set in "3G SDI OUT Level A/B" of the VIDEO SET menu is displayed.

SDI Output: Output for SDI

The "SDI" setting in "SDI/HDMI/i.LINK I/O Select" of the VIDEO SET menu is displayed.

HDMI Output: Output for HDMI

The "HDMI" setting in "SDI/HDMI/i.LINK I/O Select" of the VIDEO SET menu is displayed.

i.LINK I/O: Input and output for i.LINK

The "i.LINK" setting in "SDI/HDMI/i.LINK I/O Select" of the VIDEO SET menu is displayed.

Down Converter: SD output down-converter setting

In HD Mode, the "Down Converter" setting (Squeeze, Letterbox, Edge Crop) of the VIDEO SET menu is displayed.
In SD Mode, "Edge Crop" is displayed when EC (Edge Crop) in "Format" in "System" of the OTHERS menu is selected, and "Squeeze" is displayed when SQ (Squeeze) in "Format" in "System" of the OTHERS menu is selected.

23.98P Output: 23.98P output mode

The "23.98P Output" setting (23.98PsF, 59.94i (2-3 Pull Down)) of the VIDEO SET menu is displayed.

Button/Remote Status Screen

Assign Button: Assignable button statuses
The functions assigned with the "Assign Button" of the OTHERS menu to the respective assignable buttons are displayed.

IR Remote: IR Remote Commander status
The "IR Remote" setting of the OTHERS menu is displayed.

Battery/Media Status Screen

Battery: Battery charge remaining
The remaining charge level of the mounted battery pack is displayed.

Charge Count: Repeated charge times
The number of times that the mounted battery pack has been charged is displayed.

HDD A/HDD B: Battery remaining of PHU-220R units
When professional hard disk units are connected, the remaining power levels of the batteries of the professional hard disk units connected via the respective card slots are displayed.

Media A/Media B: Remaining space, available recording time, and estimated service life (rewriting limit)
The remaining space of the SxS memory cards in the respective card slots is indicated on the meters.
At the right, the available time for recording if done at the current bit rate is displayed, in minutes.
The time indication will be "- - min" if no SxS memory card or an invalid card is in the slot.
If the card is write-protected, a icon is shown to the right of the time indication.
The Life value is displayed only for an SxS memory card which supports the life value indication. It indicates the estimated remaining usable period of the card (virgin status as 100%). If an alarm is generated, make a backup of the card as soon as possible and replace it with a new card.

SD Card: Remaining space and available recording time of an SD card
The remaining space of the SD card in the SD card slot is indicated on the meters.
At the right, the available time for recording is displayed.
The time indication will be "- - min" if no SD card or an invalid card is in the SD card slot.

Overview of the Setup Menus

Press the MENU button to display setup menus on the LCD monitor/EVF screen with settings necessary for recording and playback. (You can also display setup menus on an external monitor.) Set items by selecting them from the following menus.

CAMERA SET menu: For setting items related to recording other than those for picture quality. (For picture quality-related items, use the PICTURE PROFILE menu *(page 44)*.)

AUDIO SET menu: For setting audio-related items.

VIDEO SET menu: For setting video output-related items.

LCD/VF SET menu: For setting items related to the LCD monitor/EVF display.

TC/UB SET menu: For setting items related to timecodes and user bits.

OTHERS menu: For setting other items.

Setup Menu Layers

MENU

- CAMERA SET
  - Gain Setup
  - Shutter
  - SLS/EX SLS
  - MF Assist
  - Color Bars
  - Flicker Reduce
  - Handle Zoom
  - Zoom Speed
  - Zoom Transition
  - Interval Rec
  - Frame Rec
  - Clip Cont.Rec
  - P.Cache Rec
  - S&Q Motion
  - Proxy
  - Rec Review
  - TLCS
  - Shockless White
  - White Switch<B>
  - ATW Speed
  - ATW Mode
  - Image Inversion
  - Auto Black Bal.
- AUDIO SET
  - Audio Input
  - Audio Output
- VIDEO SET
  - Input Source Select
  - SDI/HDMI/i.LINK I/O Select
  - 3G SDI OUT Level A/B
  - SDI/HDMI/Video Out Super
  - Down Converter
  - 23.98P Output
  - SDI Rec Control
  - Match Clip Name

(continues)

- LCD/VF SET
  - LCD
  - EVF
  - Peaking
  - Marker
  - Zebra
  - Display On/Off
- TC/UB SET
  - Timecode
  - Users Bit
  - TC Format
- OTHERS
  - All Reset
  - Network Reset
  - Camera Data
  - Time Zone
  - Clock Set
  - Language
  - Assign Button
  - Tally
  - Hours Meter
  - IR Remote
  - Battery Alarm
  - Battery INFO
  - Genlock
  - Direct Menu
  - Trigger Mode
  - System
  - Clip
  - Copy All
  - Format Media
  - Plan.Metadata
  - Network
  - Proxy File
  - Fan Control
  - Version
  - Version Up
  - Menu Scroll

Basic Menu Operations

Menu controls

MENU button ***(page 9)***
To turn Menu mode to use Setup menus on/off.

Up/Down/Left/Right buttons, SEL/SET button ***(page 9)***
When you press the up/down/left/right buttons, the cursor moves in the corresponding direction, permitting you to select menu items or setting values.
Press the SEL/SET button to enter the highlighted item.

Jog dial (SEL/SET dial) ***(page 10)***
When you turn the dial, the cursor moves up or down, permitting you to select menu items or setting values.
Press the jog dial to select the highlighted item.

CANCEL button ***(page 9)***
To return to the previous layer of the menu. An uncompleted change is canceled.

Note

In Focus Magnifier mode *(page 32)*, the setup menu cannot be used. Press the FOCUS MAG button to exit this mode.

Setting the Setup menus

Rotate the jog dial or press the up/down/left/right buttons to set the cursor to the icon of the menu you wish to set, then push the jog dial or SEL/SET button to select that menu.

- The menu item selection area can show 7 lines at maximum. When all the selectable items cannot be displayed at one time, you can scroll the display up or down by moving the cursor. A triangle appears at the upper or lower right corner of the menu item selection area to indicate that scrolling is enabled.
- For items having a wide range of available values (example: –99 to +99), the available value area is not displayed. The current setting is highlighted instead, indicating that the setting is ready for change.
- When you select "Execute" for an execution item, the corresponding function is executed.
- When you select an item that you must confirm before execution, the menu display temporarily disappears, and a confirmation message is displayed. Following the instructions of the message, and specify whether to execute or cancel.

Entering a character string

When you select an item for which a character string, such as a time value or filename, is to be specified, the input area for the character string is highlighted, and "SET" appears at the right end.

1. **Select characters by pressing the up/down/left/right buttons or turning the jog dial, then press the SEL/SET button or the jog dial to proceed.**

   The cursor moves to the next column.
   To return to the previous column, press the left button.

2. **Perform setting in the same manner up to the last column/digit.**

   The cursor moves to "SET."

3. **Press the jog dial or the SEL/SET button.**

   The setting is completed.

Setup Menu List

The functions and available settings of menus are listed below.
The default settings set at the factory are shown in bold face (example: **Speed**). The items marked with M in the Menu items column cannot be set while displaying the thumbnail screen or during playback operations.

CAMERA SET Menu

CAMERA SET Menu items	Subitems and setting values	Contents
Gain Setup Assigning gain levels to the three GAIN switch positions	Low –3 / **0** / 3 / 6 / 9 /12 /18 dB	Set the gain level to be used when the switch is set to the L position.
	Mid –3 / 0 / 3 / 6 / **9** /12 /18 dB	Set the gain level to be used when the switch is set to the M position.
	High –3 / 0 / 3 / 6 / 9 /12 / **18** dB	Set the gain level to be used when the switch is set to the H position.
Shutter Specifying operating conditions of the electrical shutter Unselectable when Slow Shutter mode/ Supersensitized Slow Shutter mode is set.	Mode **Speed** / Angle / ECS	Select modes of the Electronic Shutter. Speed mode/Angle mode (standard modes): These modes may be especially effective when you wish to record a quick-moving subject with minimal blurring. You can select Speed mode to specify the shutter speed in seconds, or Angle mode to specify the shutter speed by the shutter angle. ECS (Extended Clear Scan) mode: This mode may be used to shoot a monitor screen, eliminating horizontal bands.
	Shutter Speed 1/32, 1/33, 1/40, 1/48, 1/50, 1/60, 1/96, **1/100**, 1/120, 1/125, 1/250, 1/500, 1/1000, 1/2000	Set the shutter speed when Speed mode is selected. The available setting values vary depending on the frame frequency of the video format selected.
	Shutter Angle 11.25º / 22.5º / 45º / 72º / 86.4º / 90º / 144º / 150º / 172.8º / **180º** / 216º	Set the shutter angle when Angle mode is selected. The following frame rates are unavailable when “S&Q Motion” is set from “1” to “16”: 72°, 86.4°, 144°, 150°, 172.8°, 216°.
	ECS Frequency **60.00**	Set the ECS frequency when ECS mode is selected. The available setting values vary depending on the frame frequency of the video format selected.

CAMERA SET		
Menu items	**Subitems and setting values**	**Contents**
SLS/EX SLS Setting the Slow Shutter mode/ Supersensitized Slow Shutter mode	Setting **OFF** / 2 / 3 / 4 / 5 / 6 / 7 / 8 / 16 / 32 / 64	Set the number of cached frames. **Notes** • This cannot be set while recording and playing, or while the thumbnail screen is displayed. • This cannot be set while using Slow & Quick Motion or Cache Recording mode • "SLS/EX SLS" cannot be set if the video format is set to the following settings. HQ 1280×720/23.98P (UDF HD Mode or exFAT HD Mode) XAVC-L50 1080/59.94P (exFAT HD Mode) XAVC-L50 1080/50P (exFAT HD Mode) XAVC-L35 1080/59.94P (exFAT HD Mode) XAVC-L35 1080/50P (exFAT HD Mode) SP 1440×1080/23.98P (FAT HD Mode)
MF Assist Turning the MF Assist Function on/off	On / **Off**	Set to "On" to precisely adjust the focus automatically after you roughly adjust it manually.
Color Bars Setting the Color Bars	Camera/Bars **Camera** / Bars	Select "Bars" to output color bars.
	Bars Type **Multi** / 75% / 100% / SMPTE	Select the type of color bar to be output when "Bars" is selected. Multi: Multiformat color bars are output. 75%: To output 75% color bars 100%: To output 100% color bars SMPTE: To output SMPTE color bars.
Flicker Reduce Setting Flicker Compensation	Mode Auto / On / **Off**	Set the operation of the Flicker-Reduction function. On: To always activate it Auto: To automatically activate it when flicker is detected. Off: To not activate it **Notes** • It is recommended to set this to "Off" when shooting outdoors or under lighting that does not cause flicker. (It can be also "Auto," but the compensation may not be done properly.) • It is recommended to set this to "Auto" when shooting indoors or under various lighting that may cause flicker, such as fluorescent, sodium, or mercury-vapor lamps. (If continuously shooting under lighting that may cause flicker, "Mode" should be set to "On.")
	Frequency 50 Hz / 60 Hz **60 Hz**: UC model **50 Hz**: Other models	Set to the power supply frequency of the light source causing flicker.

CAMERA SET Menu items	Subitems and setting values	Contents
Handle Zoom Setting the zoom operation	**Off** / Low / High / Vari	Set the zoom operation by using the on-handle ZOOM button. Off: Zoom does not work. Low: Zoom works at the speed that is set for "Low" in "Zoom Speed." High: Zoom works at the speed that is set for "High" in "Zoom Speed." Vari: The deeper the on-handle ZOOM button is pressed, the faster the zoom speed.
Zoom Speed Setting the zoom speed	High 1 to 99 **(70)**	Set the speed of zooming to be executed when you press the handle ZOOM button with the zoom speed switch set to H.
	Low 1 to 99 **(30)**	Set the speed of zooming to be executed when you press the handle ZOOM button with the zoom speed switch set to L. **Note** Zooming may not operate smoothly if you select a low speed.
	Remote 1 to 99 **(50)**	Set the speed of zooming to be executed when you press the ZOOM button of the IR Remote Commander. **Note** If the infrared line from the Remote Commander is not received properly, zooming may not operate smoothly.
Zoom Transition Setting the zoom operation mode	**Linear** / Soft	Set the operation mode at the beginning and end of zooming with the on-handle ZOOM button. Linear: Zooming immediately begins at the specified speed when the ZOOM button is pressed and immediately ends when the button is released. Soft: Zooming gradually increases the speed up to the specified speed after the ZOOM button is pressed and gradually decreases the speed and ends after the button is released. (1 second at maximum from when the button is released till the operation ends.)
Interval Rec Setting the Interval Recording function	Setting On / **Off**	Turn the Interval Recording function on/off.
	Interval Time **1** to 10/15/20/30/40/50 sec 1 to 10/15/20/30/40/50 min 1 to 4/6/12/24 hour	Set the interval of recording in Interval Recording.
	Number of Frames **1** / 3 / 6 / 9 or **2** / 6 / 12 (When using 1080/59.94P, 1080/50P, 720/59.94P, or 720/50P)	Set the number of frames to be recorded at a time in Interval Recording.
Frame Rec Setting the Frame Recording function	Setting On / **Off**	Turn the Frame Recording function on/off.
	Number of Frames **1** / 3 / 6 / 9 or **2** / 6 / 12 (When using 1080/59.94P, 1080/50P, 720/59.94P, or 720/50P)	Set the number of frames to be recorded at a time in Frame Recording.

CAMERA SET		
Menu items	**Subitems and setting values**	**Contents**
Clip Cont. Rec Setting the Clip Continuous Recording function	Setting On / **Off**	Turn the Clip Continuous Recording function on/off.
P.Cache Rec Setting the Picture Cache Recording function	Setting On / **Off**	Turn the Picture Cache Recording function on/off.
	Rec Time **0-2sec** / 2-4sec / 4-6sec / 6-8sec / 8-10sec / 10-12sec / 12-14sec / 13-15sec	Set the time to cache video in the picture cache memory (the time to a point where recording is to start when you press the REC START/STOP button in Picture Cache Recording). **Note** When you set “Format” in “System” of the OTHERS menu to format XAVC-I, “0-2sec” or “2-4sec” can be selected.
S&Q Motion Setting the Slow & Quick Motion function Unselectable while “Format” in “System” of the OTHERS menu is set to “1920×1080/59.94P” or “1920×1080/50P”	Setting On / **Off**	Turn the Slow and Quick Motion function on/off.
	Frame Rate UDF 1 to **30** (NTSC) When “Format” is set to “HD422 50/1080/29.97P,” “HD422 50/1080/23.98P,” “HQ 1920×1080/29.97P,” or “HQ 1920×1080/23.98P” 1 to 60 **(30)** (NTSC) When “Format” is set to “HD422 50/720/59.94P,” “HD422 50/720/29.97P,” “HD422 50/720/23.98P,” or “HQ 1280×720/59.94P” 1 to **25** (PAL) When “Format” is set to “HD422 50/1080/25P” or “HQ 1920×1080/25P” 1 to 50 **(25)** (PAL) When “Format” is set to “HD422 50/720/50P,” “HD422 50/720/25P,” or “HQ 1280×720/50P” exFAT 1 to **30**, 60 (NTSC) When “Format” is set to “XAVC-I 1080/29.97P,” “XAVC-I 1080/23.98P,” “XAVC-L50 1080/29.97P,” “XAVC-L50 1080/23.98P,” “XAVC-L35 1080/29.97P,” or “XAVC-L35 1080/23.98P”	Set the recording frame rate for Slow & Quick Motion mode. The setting value range varies depending on the selection region and video format.

CAMERA SET		
Menu items	**Subitems and setting values**	**Contents**
	1 to **30** (NTSC) When “Format” is set to “HD422 50/1080/29.97P,” “HD422 50/1080/23.98P,” “HQ 1920×1080/29.97P,” or “HQ 1920×1080/23.98P” 1 to 60 **(30)** (NTSC) When “Format” is set to “XAVC-I 720/59.94P,” “XAVC-L50 720/59.94P,” “HD422 50/720/59.94P,” “HD422 50/720/29.97P,” “HD422 50/720/23.98P,” or “HQ 1280×720/59.94P” 1 to **25**, 50 (PAL) When “Format” is set to “XAVC-I 1080/25P,” “XAVC-L50 1080/25P,” or “XAVC-L35 1080/25P” 1 to **25** (PAL) When “Format” is set to “HD422 50/1080/25P” or “HQ 1920×1080/25P” 1 to 50 **(25)** (PAL) When “Format” is set to “XAVC-I 720/50P,” “XAVC-L50 720/50P,” “HD422 50/720/50P,” “HD422 50/720/25P,” or “HQ 1280×720/50P” FAT 1 to **30** (NTSC) When “Format” is set to “HQ 1920×1080/29.97P” or “HQ 1920×1080/23.98P” 1 to 60 **(30)** (NTSC) When “Format” is set to “HQ 1280×720/59.94P,” “HQ 1280×720/29.97P,” or “HQ 1280×720/23.98P” 1 to 30 **(25)** (PAL) When “Format” is set to “HQ 1920×1080/25P” 1 to 60 **(25)** (PAL) When “Format” is set to “HQ 1280×720/50P” or “HQ 1280×720/25P”	
Proxy Setting for proxy recording	On / **Off**	Turns the proxy recording on an SD card on/off.

CAMERA SET Menu items	Subitems and setting values	Contents
Rec Review Setting the playback time for Rec-Review	**3 sec** / 10 sec / Clip	Set the time to play the last recorded clip using the Rec-Review function. 3 sec: Last 3 seconds 10 sec: Last 10 seconds Clip: Entire duration of the clip
TLCS Setting the Total Level Control System (auto adjustment system of gain, exposure and shutter)	Level +1.0 / +0.5 / ±**0** / –0.5 / –1.0	Set the target level (to make brighter or darker) of auto iris control in TLCS. (This setting also affects the gain control in AGC mode and shutter-speed control in Auto Shutter mode.) +1.0: Approx. one stop further open +0.5: Approx. half a stop further open ±0: Standard –0.5: Approx. half a stop further closed –1.0: Approx. one stop further closed
	Mode Backlight / **Standard** / Spotlight	Set the auto iris control mode in TLCS. Backlight: Backlight mode to reduce darkening of the center subject against lights Standard: Standard mode Spotlight: Spotlight mode to reduce blown-out highlights on the center subject in the spotlight
	Speed –99 to +99 (**+50**)	Set the tracing speed of TLCS control.
	AGC On / **Off**	Turn the AGC (Auto Gain Control) function on/off.
	AGC Limit 3 / 6 / 9 / **12** / 18 dB	Set the maximum gain in AGC.
	AGC Point **F2.8** / F4 / F5.6	Set the iris point for switching to auto-iris and AGC (Auto Gain Control) control when AGC is on.
	Auto Shutter On / **Off**	Turn the Auto Shutter control function on/off.
	A.SHT Limit 1/100 1/150 1/200 **1/250**	Set the maximum shutter speed in Auto Shutter control.
	A.SHT Point F5.6 / F8 / F11 / **F16**	Set the exposure position for switching auto iris and auto shutter control when Auto Shutter is on.
Shockless White Setting the shockless white balance	Off / 1 / **2** / 3	Select the speed of change in white balance when the white balance mode is switched. Set to “Off” to instantly change the white balance. Select a larger number to change the white balance more slowly through interpolation.
White Switch <B> Setting for the WHITE BAL switch	**ATW** / MEM	Select the white balance adjustment mode selected at the B position of the WHITE BAL switch.
ATW Speed Setting for Auto Tracing White Balance	1 / 2 / **3** / 4 / 5	Set the tracing speed of ATW. The larger the number you set, the speed becomes faster.

CAMERA SET		
Menu items	**Subitems and setting values**	**Contents**
ATW Mode ATW mode setting	**Natural** / Pure	Natural: Depending on the brightness of scenes, automatically adjusts the white balance to natural ambience. Pure: Not leaving the blue color or red color, automatically adjusts the white balance closer to original colors.
Image Inversion Setting the image inversion function	**Normal** / H INV / V INV / H+V	Normal: Normal image direction H INV: To horizontally invert the image V INV: To vertically invert the image H+V: To horizontally and vertically invert the image **Notes** • This cannot be set while recording, while the color bars are displayed or while using Recording Review. • This cannot be set while the automatic black balance function is set.
Auto Black Bal. Setting the automatic black balance	Execute / Cancel	Turn the automatic black balance function on/off. **Notes** • This cannot be set while recording or while the color bars are displayed. • This cannot be set while using the Picture Cache Recording mode, the Interval Recording mode, the Frame Recording mode, the Slow and Quick Motion mode, the Slow Shutter mode or the Supersensitized Slow Shutter mode.
Auto FB Adjust Automatic adjustment for the flange focal length	Execute / Cancel	Executes the automatic flange focal length adjustment by selecting "Execute." **Notes** • Execute this function when the video format is set to 59.94i or 50i. • Execute this function after setting the ND filter to CLEAR. "Auto FB Adjust" cannot be selected when the ND filter is set to 1 or 2. For details, see the steps of the automatic adjustment for the flange focal length *(page 41)*.

AUDIO SET Menu

AUDIO SET Menu items	Subitems and setting values	Contents
Audio Input Setting for audio inputs M	CH3 Input Source **Internal** / External	Set the audio signal source to be recorded for CH3 for a 4-channel recordable format. Internal: Record the L side of the internal microphone for CH3. External: Record the AUDIO IN CH1 signal for CH3.
	CH4 Input Source **Internal** / External	Set the audio signal source to be recorded for CH4 for a 4-channel recordable format. Internal: Record the R side of the internal microphone for CH4. External: Record the AUDIO IN CH2 signal for CH4.
	EXT MIC CH1 Ref –70 dB / **–60 dB** / –50 dB / –40 dB / –30 dB	Select the reference input level for when an external microphone is connected to the AUDIO IN CH-1 connector and that signal is being used for the audio signal source for CH1 or CH3. This can be selected regardless of the setting of the AUDIO SELECT switch. **Note** This is unavailable when the AUDIO IN CH-1 switch is set to INT and “CH3 Input Source” is set to “Internal.” This is also unavailable when the CH-1 input (LINE/MIC/MIC+48V) switch is set to LINE.
	EXT MIC CH2 Ref –70 dB / **–60** dB / –50 dB / –40 dB / –30 dB	Select the reference input level for when an external microphone is connected to the AUDIO IN CH-2 connector and that signal is being used for the audio signal source for CH2 or CH4. This can be selected regardless of the setting of the AUDIO SELECT switch. **Note** This is unavailable when the AUDIO IN CH-2 switch is set to INT and “CH4 Input Source” is set to “Internal.” This is also unavailable when the CH-2 input (LINE/MIC/MIC+48V) switch is set to LINE.
	INT MIC Level –12 dB / –6 dB / **0 dB** / +6 dB / +12 dB	Select the internal microphone level. This can be selected regardless of the AUDIO SELECT switch setting.
	Line Input Ref **+4dB** / 0dB / –3dB / EBUL	Select the reference input level for when the AUDIO IN CH-1/CH-2 connectors are set to LINE.
	Reference Level **–20dB** / –18dB / –16dB / –12dB / EBUL	Select the 1kHz test signal output level.
	Limiter Mode **Off** / –6 dB / –9 dB / –12 dB / –15 dB / –17 dB	Select whether to activate the limiter when a loud signal is input while the AUDIO SELECT switch is set to MANU (manual).
	AGC Spec **–6 dB** / –9 dB / –12 dB / –15 dB / –17 dB	Select the audio input level AGC.

AUDIO SET		
Menu items	**Subitems and setting values**	**Contents**
	CH1&2 AGC Mode Mono / **Stereo**	Select auto tuning for the input level of an analog audio signal recorded to CH-1/CH-2. Mono: Perform for each channel. Stereo: Perform in stereo mode.
	CH3&4 AGC Mode **Mono** / Stereo / Off	Select auto tuning for the input level of an analog audio signal recorded to CH-3 or CH-4. Mono: Perform for each channel. Stereo: Perform in stereo mode. Off: Do not perform auto tuning. The Limiter Mode setting is applied.
	1KHz Tone On / **Off**	Turn the 1-kHz reference tone signal on/off.
	Wind Filter CH-1 On / **Off**	Turn the wind filter for CH1 on/off.
	Wind Filter CH-2 On / **Off**	Turn the wind filter for CH2 on/off.
	Wind Filter CH-3 On / **Off**	Turn the wind filter for CH3 on/off.
	Wind Filter CH-4 On / **Off**	Turn the wind filter for CH4 on/off.
	EXT CH Select CH-1 **CH-1/CH-2**	CH-1: To record the CH1 external input signal to both CH-1 and CH2 (when the CH-2 AUDIO IN switch is set to EXT). If “CH4 Input Source” is set to “External,” you can also record to CH4. CH-1/CH-2: To record each external input signal to its respective channel.
Audio Output Setting for audio outputs	Monitor CH **CH-1/CH-2** (**CH-3/CH-4**) CH-1+CH-2 (CH-3+CH-4) CH-1 (CH-3) CH-2 (CH-4)	Select the audio channel(s) to be fed to the headphones and the built-in speaker. CH-1/CH-2 (CH-3/CH-4): Stereo CH-1+CH-2 (CH-3+CH-4): Mix CH-1 (CH-3): CH-1 (CH-3) only CH-2 (CH-4): CH-2 (CH-4) only ( ): with Output CH set to “CH-3/CH-4”
	Output CH **CH-1/CH-2** CH-3/CH-4	Select audio output channels from either channels 1 and 2 or channels 3 and 4.
	Alarm Level 0 to 7 (**4**)	Set the alarm sound volume.
	Beep On / **Off**	Select whether or not to sound a beep upon each operation.

VIDEO SET Menu

VIDEO SET Menu items	Setting values	Contents
Input Source Select Setting the input source	**Camera** / i.LINK	Select video and audio signal for the input source. Camera: Camera image i.LINK: HDV/DVCAM input via the i.LINK (HDV/DV) connector **Notes** • "i.LINK" is unavailable for UDF or exFAT. • "i.LINK" is unavailable when "Wi-Fi&Proxy/USB" is set to "Wi-Fi&Proxy."
SDI/HDMI/ i.LINK I/O Select Selecting input/ output signals for the connectors	When using exFAT HD Mode 3G SDI & HD HDMI **HD SDI & HD HDMI** SD SDI & SD HDMI i SD HDMI P Off When using UDF HD Mode **HD SDI & HD HDMI** SD SDI & SD HDMI i SD HDMI P Off When using FAT HD Mode (HQ) **HD SDI & HD HDMI** SD SDI & SD HDMI i SD HDMI i & DVCAM SD HDMI P Off When using FAT HD Mode (SP) **HD SDI & HD HDMI** SD SDI & SD HDMI i HD HDMI & HDV SD HDMI i & HDV SD HDMI P & HDV SD HDMI i & DVCAM Off When using exFAT SD Mode or UDF SD Mode **SD SDI & SD HDMI i** Off When using FAT SD Mode **SD SDI & SD HDMI i** SD HDMI i & DVCAM Off	3G SDI & HD HDMI: To output 3G SDI signals from the SDI OUT connector, and HD HDMI signals from the HDMI OUT connector. HD SDI & HD HDMI: To output HD SDI signals from the SDI OUT connector, and HD HDMI signals from the HDMI OUT connector. SD SDI & SD HDMI i: To output SD SDI signals from the SDI OUT connector, and SD HDMI interlace signals from the HDMI OUT connector. HD HDMI & HDV: To output HD HDMI signals from the HDMI OUT connector, and input/output HDV streams from the i.LINK (HDV/DV) connector. SD HDMI i & HDV: To output SD HDMI interlace signals from the HDMI OUT connector, and input/output HDV streams from the i.LINK (HDV/DV) connector. SD HDMI P & HDV: To output SD HDMI progressive signals from the HDMI OUT connector, and input/output HDV streams from the i.LINK (HDV/DV) connector. SD HDMI i & DVCAM: To output SD HDMI interlace signals from the HDMI OUT connector, and input/output DVCAM streams from the i.LINK (HDV/DV) connector. SD HDMI P: To output SD HDMI progressive signals from the HDMI OUT connector. Off: There is no output from the SDI OUT/HDMI OUT/ i.LINK connectors. **Notes** • Signals are not output from the SDI OUT connector when this is set to other than an HD SDI or SD SDI setting. • Slow & Quick Motion mode cannot be used when this is set to input/output DVCAM streams. • When "Wi-Fi&Proxy/USB" is set to "Wi-Fi&Proxy," signals are not output from the HDMI OUT, VIDEO OUT, and A/V OUT connector, and signals are not input/output from the i.LINK connector. • When "Wi-Fi&Proxy/USB" is set to "Wi-Fi&Proxy," "SDI/HDMI/i.LINK I/O Select" is set to the following setting automatically and cannot be selected. —For exFAT HD, UDF HD, FAT HD: "HD SDI & HD HDMI" —For exFAT SD, UDF SD, FAT SD: "SD SDI & SD HDMI i"

VIDEO SET		
Menu items	**Setting values**	**Contents**
3G SDI OUT Level A/B Setting the method of the 3G SDI output signals	LevelA / **LevelB**	Select the data mapping method for the 3G SDI output signals. **Memo** • This setting is available when "SDI/HDMI/i.LINK I/O Select" is set to "3G SDI & HD HDMI." • "LevelA" will be compatible in future upgrades.
SDI/HDMI/ Video Out Super Setting the character information for each output	On / **Off**	Set whether to add the menus and status indications of the LCD monitor/EVF screen to the output of the SDI OUT, HDMI OUT, VIDEO OUT, and A/V OUT connectors. **Notes** • This setting for each output is not available when "Format" in "System" is set to 1920×1080/59.94P, 50P and "SDI/ HDMI/i.LINK I/O Select" is set to "3G SDI&HD HDMI." • When "Wi-Fi&Proxy/USB" is set to "Wi-Fi&Proxy," "SDI/ HDMI/Video Out Super" is set to "Off" automatically, and cannot be selected. The menus and status indications of the LCD monitor/EVF screen are not added. • On the thumbnail, EXPAND CLIP, and SHOT MARK screens, the menus and status indications on the LCD monitor/EVF screen are displayed regardless of the setting of this item.
Down Converter Selecting the operation mode of the down converter	**Squeeze** / Letterbox / Edge Crop	Set the output mode (aspect) for SD signals Squeeze: To horizontally reduce a 16:9 picture to output a 4:3 picture Letterbox: To mask the upper and lower areas of a 4:3 picture to display a 16:9 picture in the center of the screen Edge Crop: To cut the both sides of a 16:9 picture to output a 4:3 picture
23.98P Output Selecting Output mode	**59.94i (2-3 Pull Down)**/ 23.98PsF	Select the video output format when the video format is the following setting. • For UDF HD Mode: HD422 50/1080/23.98P HQ 1920×1080/23.98P HQ 1440×1080/23.98P • For exFAT HD Mode: XAVC-I 1080/23.98P XAVC-L50 1080/23.98P XAVC-L35 1080/23.98P HD422 50/1080/23.98P HQ 1920×1080/23.98P HQ 1440×1080/23.98P • For FAT HD Mode: HQ 1920×1080/23.98P HQ 1440×1080/23.98P **Note** When "Wi-Fi&Proxy/USB" is set to "Wi-Fi&Proxy," the video output format is set to 23.98PsF automatically for the above format settings.

VIDEO SET		
Menu items	**Setting values**	**Contents**
SDI Rec Control Setting the SDI recording control	**Off** / HD SDI Remote I/F	To turn the function to enabling recording synchronized with this camcorder. HD SDI Remote I/F: To feed a REC trigger signal to a recorder connected to the SDI OUT connector.
Match Clip Name	On / **Off**	Set whether to add the clip name information to the SDI output.

LCD/VF SET Menu

LCD/VF SET Menu items	Subitems and setting values	Contents
LCD Adjusting the LCD monitor	Color –99 to +99 (±**0**)	Adjust the color of pictures on the LCD monitor.
	Contrast –99 to +99 (±**0**)	Adjust the contrast of pictures on the LCD monitor.
	Brightness –99 to +99 (±**0**)	Adjust the brightness of pictures on the LCD monitor.
EVF Setting the viewfinder	Backlight **High** / Low	Select the brightness of the EVF backlight.
	Mode **Color** / B&W	Select the display mode of the EVF while recording (or standing by to record). Color: Color mode B&W: Monochrome mode
	Contrast –99 to +99 (±**0**)	Adjust the contrast of pictures on the EVF screen.
	Brightness –99 to +99 (**+30**)	Adjust the brightness of pictures on the EVF screen.
	Power **Auto** / On	Set the condition to turn the EVF on. Auto: To turn it on when the LCD monitor is closed or rotated to the upside-down position. On: To keep it on regardless of the status of the LCD monitor. **Note** When "Wi-Fi&Proxy/USB" is set to "Wi-Fi&Proxy," this setting is set to "Auto" automatically and cannot be selected. This setting is set to "Off" automatically when the LCD monitor is rotated to the upside-down position.
Peaking Setting the peaking function for the LCD monitor/EVF M	Setting On / **Off**	Turn the peaking function on/off.
	Color **White** / Red / Yellow / Blue	Select the color of the peaking signal.
	Level High / **Mid** / Low	Set the level of the peaking signal.

LCD/VF SET Menu items	Subitems and setting values	Contents
Marker Setting the markers added to pictures on the LCD monitor/EVF screen M	Setting **On** / Off	Turn all marker indications on/off in combination.
	Safety Zone **On** / Off	Turn the safety zone marker on/off.
	Safety Area 80% / **90%** / 92.5% / 95%	Select the size (ratio to the entire screen) of the safety zone marker.
	Center Marker **On** / Off	Turn the center marker on/off.
	Aspect Marker Line / Mask / **Off**	Select the aspect marker. Line: To show white lines Mask: To lower the video signal level of areas outside the marker range. Off: To not display **Note** No aspect marker is displayed when a video format of EC (Edge Crop) is selected in SD Mode.
	Aspect Select **4:3** / 13:9 / 14:9 / 15:9 / 1.66:1 / 1.85:1 / 2.35:1 / 2.4:1	Select the ratio of the aspect marker.
	Aspect Mask 90% / 80% / 70% / 60% / 50% / 40% / 30% / 20% / 10% / **0%**	When “Aspect Marker” is “Mask,” select the brightness of images outside the aspect marker.
	Guide Frame On / **Off**	Turn the guide frame marker on/off.
Zebra Setting the zebra pattern M	Setting On / **Off**	Turn the zebra function on/off.
	Zebra Select **1** / 2 / Both	Select the zebra pattern(s) to be displayed. 1: To display only Zebra1 (the default is 70%) for an area within ±10% of the “Zebra1 Level” video level. 2: To display only Zebra2 (the default is 100%) for a video level over 100%. Both: To display both zebra 1 and zebra 2
	Zebra1 Level 50 to 107 (**70**)	Set the display level of zebra 1.
Display On/Off Selecting the items to be displayed on the LCD monitor/ EVF screen M	Video Level Warnings **On** / Off	Turn the warning indication to be displayed when the picture is too bright or too dark on/off.
	Sending Clip Info **On** / Off	Display the uploading status of a clip while connected with the wireless LAN.
	Brightness Display On / **Off**	Turn the numeric indication to show the picture brightness on/ off.
	Histogram Display On / **Off**	Turn the histogram indication to show the level distribution of the picture on/off.
	Lens Info Meter / Feet / **Off**	Select the depth-of-field indication. Meter: To indicate in meters Feet: To indicate in feet Off: To not indicate
	Zoom Position **Number** / Bar / Off	Select the type of zoom position indication. Number: Indication with a number Bar: Indication with a bar Off: To not display

LCD/VF SET		
Menu items	**Subitems and setting values**	**Contents**
	Audio Level Meter **On** / Off	Turn the audio level meter indication on/off.
	Timecode **On** / Off	Turn the time data (timecode, user bits, duration) indication on/off.
	Battery Remain **On** / Off	Turn the battery remaining/DC input voltage indication on/off.
	Media Remain **On** / Off	Turn the media remaining indication on/off.
	TLCS Mode **On** / Off	Turn the TLCS mode indication on/off.
	Steady Shot **On** / Off	Turn the Steady Shot indication on/off.
	Focus Mode **On** / Off	Turn the focus operation mode indication on/off.
	White Balance Mode **On** / Off	Turn the white balance mode indication on/off.
	Picture Profile **On** / Off	Turn the Picture Profile indication on/off.
	Filter Position **On** / Off	Turn the ND filter setting indication on/off.
	Iris Position **On** / Off	Turn the iris setting indication on/off.
	Gain Setting **On** / Off	Turn the gain setting indication on/off.
	Shutter Setting **On** / Off	Turn the shutter mode and speed indication on/off.
	Rec Mode **On** / Off	Turn the special recording mode (Frame Rec, Interval Rec, S&Q Motion) indication on/off.
	Video Format **On** / Off	Turn the video format indication on/off.
	Clip Name **On** / Off	Turn the clip name display on/off.
	ClipNumber (PB) **On** / Off	Turn the clip number display on/off.
	SDI Rec Control **On** / Off	Turn the synchronous recording display (the Rec2/Rec2-P display) on/off. When “HD SDI Remote I/F” is selected: “Rec2” is displayed. When “Proxy” is set to “On”: “Rec2-P” is displayed.
	Wide Conversion **On** / Off	Turn the wide Conversion setting indication on/off.
	Wireless Status **On** / Off	Turn the status of radio wave on/off while connecting with the wireless LAN.
	SD Card Remain **On** / Off	Turn the remaining time indication for the SD card in the camcorder on/off.

TC/UB SET Menu

TC/UB SET Menu items	Subitems and setting values	Contents
Timecode Setting the timecode	Mode **Preset** / Regen / Clock	Set the timecode mode. Preset: To start the timecode from the specified value Regen (regeneration): To continue the timecode during recording only. When you insert another SxS memory card, the camcorder starts next recording so that the timecode continues from the last recorded timecode on the card. Clock: To use the current clock time as the timecode **Notes** • In Interval Recording, Frame Recording and Slow & Quick Motion Recording, if you set "Mode" to "Preset" the timecode advances in Rec Run mode regardless of the "Run" setting. If you set it to "Clock," the timecode advances in Regen mode. • When the Picture Cache function *(page 39)* is active ("Setting" of "P.Cache Rec" is set to "On"), the timecode always advances in Free Run mode. When the Picture Cache Recording function is deactivated, the running mode is restored to the selected mode.
	Run **Rec Run** / Free Run	Set the running mode when the timecode mode is set to "Preset." Rec Run: To advance the timecode during recording only. The continuity of the timecode is maintained between clips in the sequence of recording as long as the SxS memory card is not changed. If you remove the memory card and record on another card, the timecode will not continue when you return the first card to the slot again. Free Run: The timecode keeps advancing regardless of the state of recording to the SxS memory card.
	Setting	Set the timecode to a desired value.
	Reset Execute / Cancel	Select "Execute" to reset the timecode to 00:00:00:00.
	TC Out **Auto** / Generator	Select the timecode output. Auto: To output the timecode generator value during recording, and the timecode reader value during playback. Generator: To output the timecode generator value during recording or playback.
Users Bit Setting the user bits	Mode **Fix** / Date	Set the user bit mode. Fix: To use a desired fixed value as the user bits Date: To use the current date
	Setting	Set the user bits to a desired value.

TC/UB SET		
Menu items	**Subitems and setting values**	**Contents**
TC Format Setting the time code format	**DF** / NDF	Set the timecode format. DF: Drop frame NDF: Non drop frame **Note** The current video format/frame frequency determines whether the mode is fixed either to DF or NDF (see below), regardless of the TC Format setting.

Video formats	Frame setting	TC Format
59.94i 59.94P 29.97P 23.98P 1) SP 1440×1080/ 23.98P (FAT) HQ 1280×720/ 23.98P (UDF)	00 to 29	DF/NDF switchable (Fixed to DF in Clock mode)
23.98P XAVC-I 1080/ 23.98P XAVC-L50 1080/ 23.98P XAVC-L35 1080/ 23.98P HD422 50/1080/ 23.98P HD422 50/720/ 23.98P HQ 1920×1080/ 23.98P HQ 1440×1080/ 23.98P HQ 1280×720/ 23.98P (FAT)	00 to 23 2)	Fixed to NDF 3)
50i 50P 25P	00 to 24	Fixed to NDF

1) With DF, the frame digits can be set as desired in the range of 00 to 29.
With NDF, the frame at the beginning of recording is limited to 00, 05, 10, 15, 20, or 25.

2) The frame digits in "Setting" is limited to 00, 04, 08, 12, 16, and 20.
The frame at the beginning of recording is limited to 00, 04, 08, 12, 16, or 20.
As "23.98P Output" *(page 94)* of the VIDEO SET menu becomes 2-3 pull-down 59.94i when recording (or standing by to record) HQ 1920×1080/23.98P other than when "23.98PsF" is selected, the overlapping timecodes of frames output from the SDI OUT connector are renumbered from 00 to 29.

3) Even in Clock mode, the timecode is gradually shifted, because it is counted by NDF.
As output from the SDI OUT connector becomes 2-3 pulled-down video when recording (or standing by to record) HQ 1920×1080/23.98P and other than "23.98PsF" is selected for "23.98P Output" *(page 94)* of the VIDEO SET menu, fields are created in which overlapping timecodes are displayed on the screen.

OTHERS Menu

OTHERS Menu items	Subitems and setting values	Contents
All Reset Resetting to the factory status	Execute/Cancel	Select “Execute” to reset the camcorder to the factory status.
Network Reset Resetting the network settings to the factory status	Execute/Cancel	Resets the network settings to the factory status. **Memo** This setting is available when “Wi-Fi&Proxy/USB” is set to “Wi-Fi&Proxy.”
Camera Data Storing/recalling the menu settings to an SxS memory card or USB flash drive	Store Execute/Cancel	When you select “Execute” to store the setting values to an SxS memory card, the setup file is stored to one of the following directories. For UDF: /General/Sony/PRO/CAMERA/XDCAM/PXW_X200/ For exFAT: /XDROOT/General/Sony/PRO/CAMERA/XDCAM/PXW_X200/ For FAT: /SONY/PRO/CAMERA/XDCAM_EX/PXW_X200/
	Recall Execute/Cancel	Select “Execute” to retrieve the setting values from an SxS memory card.
	All Save (USB) Execute/Cancel	When you select “Execute” to store the setting values to a USB flash drive, the setup file is stored to the following directory. /MSSONY/SONY/PRO/CAMERA/XDCAM/PXW_X200/
	All Load (USB) Execute/Cancel	Select “Execute” to retrieve the setting values from a USB flash drive.
Time Zone Setting the time difference	UTC –12:00 to +13:30	Set the time-zone difference from UTC in steps of 30 minutes. **Note** The default setting is different among the sales areas. United States and Canada: –5:00 Europe area: 0:00 Oceania: +10:00
Clock Set Setting the built-in clock	Date/Time	Set the current time and date.
	12H/24H 12H / **24H**	Select the display mode of time. 12H: 12-hour mode 24H: 24-hour mode
	Date Mode **YYMMDD** / MMDDYY / DDMMYY	Select the display mode of the date. YYMMDD: In sequence of year, month, day MMDDYY: In sequence of month, day, year DDMMYY: In sequence of day, month, year

OTHERS		
Menu items	**Subitems and setting values**	**Contents**
Language Selecting the language for menus and messages	**English** / Chinese / Spanish / Portuguese / Russian / Indonesian	English: To display in English Chinese: To display in Chinese Spanish: To display in Spanish Portuguese: To display in Portuguese Russian: To display in Russian Indonesian: To display in Indonesian **Note** Language for menus and messages differ depending on countries and regions.

OTHERS		
Menu items	**Subitems and setting values**	**Contents**
Assign Button Assigning functions to the assignable buttons	<1> to <5> Off / Zebra / Peaking / Marker / Last Clip DEL / ATW / ATW Hold / Rec Review / Rec / Picture Cache / Freeze Mix / Focus Magnifier / Spotlight / Backlight / IR Remote / Shot Mark1 / Shot Mark2 / VF Mode / BRT Disp / Histogram / Lens Info / OK Mark / Clip Flag OK / Clip Flag NG / Clip Flag Keep / Clip Continuous Rec / LCD/VF Adjust / Color Bars / One Push Auto Iris / Handle Zoom / NFC <1> **Zebra** <2> **Peaking** <3> **Off** <4> **Off** <5> **Off**	Assign a function to the ASSIGN buttons 1/2/3/4/5. (The selectable functions are shared.) Off: No function Zebra: For turning the zebra function on/off Peaking: For turning the peaking function on/off Marker: For turning the safety zone, center marker, aspect marker and guide frame functions on/off as a group Last Clip DEL: For executing the last clip delete (retake) function ATW: For turning the ATW function on/off ATW Hold: For turning the ATW hold function on/off Rec Review: For executing the recording review function Rec: For starting/stopping recording Picture Cache: For turning the Picture Cache Recording function on/off Freeze Mix: For executing the freeze mix function Focus Magnifier: For turning the expanded focus function on/off Spotlight: For enabling and disabling TLCS Spotlight mode Backlight: For enabling and disabling TLCS Backlight mode IR Remote: For activating/deactivating the IR Remote Commander Shot Mark1: For adding shot mark 1 (HD Mode only) Shot Mark2: For adding shot mark 2 (HD Mode only) VF Mode: For switching between color and monochrome for the EVF screen BRT Disp: For turning the brightness level indication function on/off Histogram: For turning the histogram indication function on/off Lens Info: For switching the depth-of-field indication to “Off”/“Meter”/“Feet” OK Mark: For adding or removing an OK mark (HD Mode only, not valid via the thumbnail screen) Clip Flag OK: For enabling and disabling OK flags for clips during recording and playback (UDF only) Clip Flag NG: For enabling and disabling NG flags for clips during recording and playback (UDF only) Clip Flag Keep: For enabling and disabling Keep flags for clips during recording and playback (UDF only) Clip Continuous Rec: For turning the Clip Continuous Recording function on/off LCD/VF Adjust: For switching the LCD/VF Adjust function level bar indication (LCD brightness adjustment → LCD contrast adjustment → VF brightness adjustment → VF contrast adjustment → off) Color Bars: For switching between the color bar and camera signal One Push Auto Iris: For executing the One Push iris function. Handle Zoom: For switching the handle zoom operation. NFC: For executing the NFC function.
Tally Setting the tally lamps	Front **High** / Low / Off	Set the brightness of the tally lamp. High: To brighten the lamp Low: To dim the lamp Off: To not light the lamp

OTHERS		
Menu items	**Subitems and setting values**	**Contents**
Hours Meter Displaying the hours meter	Hours (Sys)	The non-resettable accumulated time of use is displayed.
	Hours (Reset)	The resettable accumulated time of use is displayed.
	Reset Execute/Cancel	Select "Execute" to reset the Hours (Reset) value to 0.
IR Remote Activating/ deactivating the Remote Commander	On / **Off**	Set to "On" to activate remote control operations from the supplied IR Remote Commander. **Note** The setting automatically returns to "Off" when the camcorder is turned off.
Battery Alarm Setting the low power alarm	Low BATT 5% / **10%** / 15% / ... / 45% / 50%	Set the battery level at which the Low BATT warning is generated (in steps of 5%).
	BATT Empty 3% to 7% (**3%**)	Set the battery level at which the BATT Empty warning is generated.
	DC Low Volt1 11.5 V to 17.0 V (**11.5 V**)	Set the DC IN voltage at which the DC Low Volt1 warning is generated.
	DC Low Volt2 11.0 V to 14.0 V (**11.0 V**)	Set the DC IN voltage at which the DC Low Volt2 warning is generated.
Battery INFO Showing information regarding the battery pack (display only)	Type	The type (product name) is displayed.
	MFG Date	The date of manufacture is displayed.
	Charge Count	The accumulated number of times of charge/discharge is displayed.
	Capacity	The estimated total capacity of full charge is displayed.
	Voltage	The current output voltage is displayed.
	Remaining	The current remaining level is displayed.
Genlock Setting Genlock operation	H Phase (HD) –999 to +999 (±**0**)	Set the H phase (phase of the horizontal sync signal) of HD signal for Genlock operation.
	H Phase (SD) –99 to +99 (±**0**)	Set the H phase (phase of the horizontal sync signal) of SD signal for Genlock operation.
Direct Menu Setting the Direct menu function	All / **Part** / Off	All: All Direct menu operations are permitted. Part: A part of Direct menu operations is permitted. The operation is limited depending on the GAIN, SHUTTER, or WHITE BAL switch setting. Off: No Direct menu operation is permitted.
Trigger Mode Setting for operating an external recording device connected via the i.LINK connector (FAT only) M	Internal / **Both** / External	Internal: To activate recording start/stop operations only for an SxS memory card in a built-in slot. Both: To activate recording start/stop operations both for an SxS memory card in a built-in slot and the external recording device connected via the i.LINK connector. External: To activate recording start/stop operations only for the external recording device connected via the i.LINK connector.

OTHERS		
Menu items	**Subitems and setting values**	**Contents**
System	Country NTSC Area / NTSC(J) Area / PAL Area	Select the area of use and setup ON/OFF setting. NTSC Area: Setup ON NTSC(J) Area: Setup OFF PAL Area: Setup OFF **Note** The default setting is different among the sales areas. United States and Canada: NTSC Area Other areas: PAL Area
	F.Sys. UDF / **exFAT** / FAT	Switch the file system between UDF/exFAT/FAT.
	HD/SD **HD** / SD	Switch between HD Mode and SD Mode.
	XAVC/MPEG2 **XAVC** / MPEG2	Switch between XAVC and MPEG2 format for exFAT HD Mode.
	Format	Select the video format for recording. **HD Mode** • Bit rate UDF: HD422 50 or HD420 HQ exFAT: XAVC, HD422 50, or HD420 HQ FAT: HQ or SP • Horizontal resolution 1920, 1440, or 1280 • Frame rate 23.98, 25, 29.97, 50, or 59.94 • Scan system i (interlace) or P (progressive) **SD Mode** • Frame rate 25, 29.97, 50, or 59.94 • Scan system i (interlace) or P (progressive) • Aspect SQ (Squeeze) or EC (Edge Crop) *For about the video format that can be selected for each mode, see "Video Format (Format)" (page 122).* **Notes** • When "Wi-Fi&Proxy/USB" is set to "Wi-Fi&Proxy" or "USB A," "1920×1080/59.94P" and "1920×1080/50P" cannot be selected. • When setting to "1920×1080/59.94P" or "1920×1080/50P," signals are not output from the A/V OUT and VIDEO OUT connectors.

OTHERS		
Menu items	**Subitems and setting values**	**Contents**
Clip Setting for clip name or deletion	Auto Naming C**** / Title / **Plan**	Select the method to specify clip names. C****: UDF, exFAT Title: To specify as desired by "Title Prefix" Plan: To use a name specified in planning metadata (if no name is specified in planning metadata, the name specified by "Title Prefix" is used.)
	Title Prefix **nnn_** (nnn=least three digits of the serial number) (Max. 7 characters displayed)	Call the Character Set screen to set the title part (4 to 46 characters) of the clip names. **Configuration of the Character Set screen** Character selection area (3 lines): To select a character to insert in the cursor position of the Title Prefix area. !#$%()+,-.;=@[]^_~0123456789 abcdefghijklmnopqrstuvwxyz ABCDEFGHIJKLMNOPQRSTUVWXYZ Cursor operation area (1 line): Space: To change the character in the cursor position to a space INS: To insert a space in the cursor position DEL: To delete a character in the cursor position ←: To move the cursor to the left →: To move the cursor to the right ESC: To cancel the change and exit the Character Set screen END: To validate the change and exit the Character Set screen Title Prefix area (1 line): For entering the title **To set the title** 1 Using the up/down/left/right buttons, select (highlight) a character in the character selection area to be entered in the cursor position of the Title Prefix area. Then press the SEL/SET button or the jog dial. (The selected character is entered, and the cursor is moved to the right.) 2 Repeat Step 1 for setting the title. (Use Space, INS, and DEL as required.) 3 When the title setting is completed, select END to exit the Character Set screen.
	Number Set **0001** to 9999	Set the second 4-numeric part of the clip name. Set a five-digit number for a planning metadata file.
	Update **Media(A)** / Media(B)	To update the managerial file on the SxS memory card in the selected slot.[1)]
	Last Clip DEL Execute / Cancel	Select "Execute" to delete the last recorded clip.
	All Clips DEL Execute / Cancel	Select "Execute" to delete all clips on the active SxS memory card. **Note** Clips to which you applied OK mark and clips that are locked cannot be deleted.
	Filter Clips **OK** / NG / KP / None	Select from among OK (the OK flag), NG (the not good flag), KP (the keep flag), or None (for no flag) to filter displayed clips. (UDF, exFAT)

OTHERS		
Menu items	**Subitems and setting values**	**Contents**
	Lock All Clips Execute/Cancel	Select “Execute” to protect all clips. (UDF, exFAT)
	Unlock All Clips Execute/Cancel	Select “Execute” to remove protection from all clips. (UDF, exFAT)
	Index Picture Pos 0sec to 10sec (**0sec**)	Set the image for viewing thumbnails. This selects the time difference from the start of the clip.
	Find Mode **Clip** / Rec Start	Set the action for when you press the PREV button/NEXT button. (UDF, exFAT) Clip: Move to the start of the current clip/next clip. (Pressing the PREV button from the start of a clip will move to the start of the previous clip.) Rec Start: Move to the previous Rec Start Essence Mark/the next Rec Start Essence Mark.
Copy All 2) Setting for collective copy of clips and/or General files	Clips	To copy all clips on an SxS memory card to the other.
	General Files	To copy all files in the General folder on an SxS memory card to the other.
	Clips&General	To copy all clips and files in the General folder on an SxS memory card to the other.
Format Media Formatting SxS memory cards	Media(A) Execute / Cancel	Select “Execute” to format the SxS memory card in slot A with the selected file system (UDF/exFAT/FAT).
	Media(B) Execute / Cancel	Select “Execute” to format the SxS memory card in slot B with the selected file system (UDF/exFAT/FAT).

OTHERS		
Menu items	**Subitems and setting values**	**Contents**
Plan.Metadata Setting planning metadata	Load/Slot(A) or Load/Slot(B) Execute / Cancel	To load planning metadata from the SxS memory card in slot A or B. Selecting "Execute" displays the list of the planning metadata files stored on the SxS memory card in slot A or B. Specify a file, select "Load" then "Execute" for loading. **Notes** • The file list displays up to 64 files. Even if the total number of planning metadata files is 64 or less, all of the planning metadata files may not appear if the directory where they are located in the SxS memory card (General/Sony/Planning) contains 512 or more files. • After you start loading, do not remove the SxS memory card until the completion message is displayed.
	Load/USB (in UDF or exFAT) Execute / Cancel	Loads planning metadata from the USB flash drive connected to the external device connector. Select "Execute" to show the list of the planning metadata files stored in the USB flash drive and select a file to be loaded.
	Properties Execute / Cancel	Select "Execute" to display the detailed information of the planning metadata loaded in the camcorder. File Name: Filename Assign ID: Assignment ID Created: Time and date of creation Modified: Time and date of most recent modification Modified by: Name of person who modified the file Title1: Title1 specified in file (clip name in ASCII format) Title2: Title2 specified in file (clip name in UTF-8 format) Material Gp: Number of material groups (groups of clips recorded using the same planning metadata) Shot Mark1: Name defined for Shot Mark 1 Shot Mark2: Name defined for Shot Mark 2 When you select "File Name," "Assign ID," "Title1," or "Title2" on the Planning Metadata Properties screen and then press the SEL/SET button or the jog dial, the selected item is displayed on the full screen, permitting you to check a long file or clip name at a glance. **Note** Names of shot marks cannot be displayed on the full screen even if you select Shot Mark1 or Shot Mark2.
	Clear Execute / Cancel	Select "Execute" to clear the planning metadata loaded in the camcorder.
	Clip Name Disp **Title1 (ASCII)** / Title2 (UTF-8)	Select the display mode of the clip name specified in planning metadata. **Note** When both an ASCII format name and a UTF-8 format name are specified in planning metadata, the UTF-8 format string is used as the clip name. If only either ASCII-format name or UTF-8 format name is specified in planning metadata, the specified name is displayed regardless of the menu setting.

OTHERS		
Menu items	**Subitems and setting values**	**Contents**
Network Settings and display for wireless LAN connection	Wi-Fi&Proxy/USB Wi-Fi&Proxy / USB A / **Off**	Sets the wireless LAN connection and external device connection. Wi-Fi&Proxy: Activates the wireless LAN connection. USB A: Activates the external device connection. Off: Deactivates the wireless LAN connection and external device connection.
	Wi-Fi Func. Mode Access Point / Station / **Off**	Sets the operation mode for the wireless LAN connection.
	Wi-Fi Remote On / **Off**	Select "On" when using the Wi-Fi remote commander.
	NFC Execute / Cancel	Starts the easy connection by the NFC function.
	WPS Execute / Cancel	Starts Wi-Fi Protected Setup (WPS).
	SSID&Key	Displays the SSID and key (password).
	Regenerate Key Execute / Cancel	Regenerates the key (password).
	Channel **Auto** / CH1 to CH13	Sets the channel for wireless LAN.
	IP Address	Displays the IP address of the camcorder.
	User Name (**admin**)	Sets a desired user name in 1 to 31 alphanumeric characters.
	Password (**pxw-x200**)	Sets a password in 0 to 31 alphanumeric characters. **Note** Each password character is displayed as " * ."
	Wi-Fi Version	Displays the version for the wireless LAN connecting function of the camcorder.
	Wi-Fi Version Up Execute / Cancel	Upgrades the version for the wireless LAN connecting function of the camcorder. **Notes** • Do not turn the camcorder off while updating. • This item cannot be selected when an SD card is not inserted.
Proxy File Setting the proxy recording	Size 1280×720(9Mbps) **640×360(3Mbps)** 480×270(1Mbps) 480×270(0.5Mbps)	Selects the size for the Proxy recording format.
	Format SD Card Execute / Cancel	Executes formatting of an SD card.
Fan Control Setting the fan control mode	Setting **Auto** / Off in Rec	Sets the fan control mode. Auto: Controls the fan automatically in response to changes in temperature. Off in Rec: Turn off the fan while recording. (If temperature is excessively high, the fan is turned on automatically.)
Version Showing the version of this unit	Vx.xx	The current software version of the camcorder is displayed.

OTHERS		
Menu items	**Subitems and setting values**	**Contents**
Version Up Updating this unit	Execute / Cancel	Select “Execute” to update the camcorder. Use when updating is required. **Note** This item cannot be selected when no SxS memory card has been loaded.
Menu Scroll Setting the menu scroll operation	**Normal** / Loop	Select the method for menu scrolling. Normal: The cursor moves and stops at the top or the bottom. Loop: The cursor continues moving up (jumping from the top to the bottom) or down (jumping from the bottom to the top).

1) If recording/playback cannot be made with an SxS memory card because it has been operated with a device other than this camcorder, or for some other reason, updating the managerial file on the card may improve the situation.

2) When you copy an SxS memory card including multiple clips and files to another card with the same capacity, all the clips and files may not be copied completely to the end, depending on the usage conditions or memory properties.

Connecting External Monitors and Recording Devices

To display recording/playback pictures on an external monitor, select the output signal and use an appropriate cable for the monitor to be connected.
Output signal from the camcorder can be recorded when a recording device is connected.
Regardless of whether the signal is HD or SD, the same status information and menus can be displayed on the external monitor as those on the LCD monitor/EVF screen.
According to the signal fed to the monitor, set "SDI/HDMI/Video Out Super" *(page 94)* of the VIDEO SET menu to "On."
When outputting SD signals in HD Mode, select in advance the output mode (Squeeze, Letterbox, or Edge Crop) with "Down Converter" *(page 94)* of the VIDEO SET menu.

Note

SD signals down-converted for output have the following restrictions:
Images of 50P/50i/25P are output as PAL signals, those of 59.94P/59.94i/29.97P are output as NTSC signals, and those of 23.98P are output as 2-3 pulled-down NTSC signals.

SDI OUT connector (BNC type)

The camcorder is compatible with 3G SDI, and 3G output for 59.94P/50P is enabled in exFAT HD Mode. (When the format is set to a setting other than 59.94P/50P, HD signals are output even if "SDI/HDMI/i.LINK I/O Select" is set to "3G SDI & HD HDMI.")
The connector is set at the factory to output an HD SDI signal.
When you set the camcorder to SD Mode, the connector outputs an SD SDI signal.
Set "SDI/HDMI/i.LINK I/O Select" *(page 93)* of the VIDEO SET menu to "SD SDI & SD HDMI i" to output down-converted SD SDI signals for monitoring, even in HD Mode. Use a commercially available 75-ohm coaxial cable for connection.

To start recording on an external device in synchronization

With HD SDI signal output selected, synchronized recording is possible by feeding a REC trigger signal to an external recording device connected via the SDI OUT connector. To enable synchronized recording, set "SDI Rec Control" *(page 95)* of the VIDEO SET menu to "HD SDI Remote I/F."

Notes

- If you set "SDI/HDMI/i.LINK I/O Select" of the VIDEO SET menu to other than "3G SDI & HD HDMI," "HD SDI & HD HDMI," or "SD SDI & SD HDMI i" and use the HDMI OUT connector and i.LINK (HDV/DV) connector, no signal will be output from the SDI OUT connector.
- When a connected external device does not correspond to a REC trigger signal, the device cannot be operated.
- When "Wi-Fi&Proxy/USB" is set to "Wi-Fi&Proxy," "SDI/HDMI/i.LINK I/O Select" cannot be selected.
- Level A for 3G SDI signals will be compatible in future upgrades.

HDMI OUT connector (Type A connector)

Signal output from this connector is enabled by setting "SDI/HDMI/i.LINK I/O Select" *(page 93)* of the VIDEO SET menu.
In HD Mode, you can select HD HDMI, SD HDMI interlace, or SD HDMI Progressive output.
In SD Mode, only an SD HDMI interlace signal can be output.
Use a commercially available HDMI cable for connection.

Note

When "Wi-Fi&Proxy/USB" is set to "Wi-Fi&Proxy," signals are not output from the HDMI OUT connector.

VIDEO OUT connector (BNC type)

By changing the setting of "SDI/HDMI/i.LINK I/O Select" *(page 93)* of the VIDEO SET menu, you can output HD-Y signals in HD Mode or down-converted SD analog composite signals for monitoring in SD Mode.
Use a commercially available BNC cable for connection.

Note

Signals are not output from the VIDEO OUT connector during the following settings
- When "Wi-Fi&Proxy/USB" is set to "Wi-Fi&Proxy" or "USB A."

- When “Format” in “System” is set to 1920×1080/59.94P, 50P.

i.LINK (HDV/DV) connector (IEEE1394, 4-pin)

Input/output of an HDV or DVCAM stream can be enabled by changing “SDI/HDMI/i.LINK I/O Select” *(page 93)* of the VIDEO SET menu.
To set the input, select “i.LINK” in “Input Source Select” *(page 93)* of the VIDEO SET menu.
A monitor or VTR that supports i.LINK can be connected.

For details on i.LINK connection, see “Connecting via i.LINK (FAT only)” (page 114).

Note

When “Wi-Fi&Proxy/USB” is set to “Wi-Fi&Proxy,” signals are not input/output from the i.LINK connector.

A/V OUT connector (audio/video composite multiconnector)

By changing the setting of “SDI/HDMI/i.LINK I/O Select” *(page 93)* of the VIDEO SET menu, you can output 2-channel audio and down-converted SD analog composite signals for monitoring.
Use the supplied AV connection cable for connection.

Note

Signals are not output from the A/V OUT connector during the following settings
- When “Wi-Fi&Proxy/USB” is set to “Wi-Fi&Proxy” or “USB A.”
- When “Format” in “System” is set to 1920×1080/59.94P, 50P.

Operating Clips With a Computer

To use the ExpressCard slot of a computer

If the computer is equipped with an ExpressCard/34 or ExpressCard/54 slot, you can directly insert the SxS memory card containing clips recorded with this camcorder and access to the files.

Notes

- The SxS Device Driver Software and the UDF Driver Software must be downloaded and installed on your computer. For details, see *“Software Downloads” (page 157)*.
- Operation is not guaranteed with all computers.
- Before editing, set the SxS memory card to the read only status and make a backup of the data to the computer.

For support information for the driver, visit the following URL:

http://www.sony.net/SxS-Support/

With a Windows computer, check that a Removable Disk appears in My Computer. This indicates normal status.
With a Macintosh computer, an icon is displayed on the menu bar.

To connect with a USB cable

When you connect the camcorder to the computer using the supplied USB cable, the memory card in the slot is acknowledged as an extended drive by the computer.
When two memory cards are mounted in this camcorder, they are acknowledged as two independent extended drives by the computer.

Note

The camcorder does not work on the bus power from the computer.

To check the connection to the camcorder

1 Connect the PC connector of the camcorder to the computer with the supplied USB cable, then set the power switch to ON to turn on the camcorder.

A message prompting you to confirm that you wish to connect to the computer is displayed on the LCD monitor/EVF screen.

Note

This message will not be displayed while another confirmation message or in-progress message (e.g., for formatting or restoration of an SxS memory card) is shown on the screen. It appears when formatting or restoration is completed. The message is also not displayed while the CLIP INFO screen is shown on the screen. It appears when an operation on the CLIP INFO screen is completed or you return to the thumbnail screen.

2 Select "Execute" by using the up/down/left/right buttons or the jog dial.

3 With Windows, check that the memory card is displayed as a removable disk in My Computer.
With Macintosh, check that a "NO NAME" or "Untitled" folder was created on the desktop. (The Macintosh folder name can be changed.)

Notes

- The following operations must be eliminated when the access lamp is lit in red.
  —Turning the power off or disconnecting the power cord
  —Removing the SxS memory card
  —Disconnecting the USB cable
- Operation is not guaranteed with all computers.
- Use the supplied USB cable for connection.

Removing an SxS memory card

Windows

1. Click on the icon of "Safely Remove Hardware" on the task bar of the computer.
2. Select "Safely remove SxS Memory Card - Drive(X:)" from the displayed menu.
3. Check that the Safe To Remove Hardware message appears then remove the card.

Macintosh

Drag the SxS memory card icon on the desktop to Trash.

If the SxS memory card icon is located on Finder, click on the eject icon on its side.

Note

Do not select "Card Power Off" from the SxS memory card icon displayed on the menu bar.

Using the application software

To copy clips to the local disk of your computer, the dedicated application software must be downloaded and installed on your computer. For details, see *"Software Downloads" (page 157)*. Although the data regarding recorded materials are stored over multiple files and folders, you can easily handle the clips without considering such data and directory structure by using the dedicated application software.

Note

If you operate, e.g. copy the clips on the SxS memory card by using the Explorer (Windows) or Finder (Macintosh), the subsidiary data contained by the clips may not be maintained.

Using a nonlinear editing system

For a nonlinear editing system, optional editing software that corresponds to the recording formats used with this camcorder is required. Store the clips to be edited on the HDD of your computer in advance, using the dedicated application software.

Connecting via i.LINK (FAT only)

When an HDV-compatible video format (SP 1440×1080/59.94i, SP 1440×1080/50i, or SP 1440×1080/23.98P) or a DVCAM-compatible video format (format of SD Mode) is selected, setting "SDI/HDMI/i.LINK I/O Select" *(page 93)* of the VIDEO SET menu to "HDV" or "DVCAM" enables signal inputs/outputs via the i.LINK (HDV/DV) connector.
You can record the same images as those recorded on an SxS memory card in this camcorder on an external device connected to the i.LINK (HDV/DV) connector, or record playback pictures of the external device on the memory card in the camcorder.
DVCAM stream audio is only available in 48 kHz 16-bit 2-channel lock audio format.

Notes

- Use the i.LINK (HDV/DV) connector only for one-to-one i.LINK connection.
- When you change a setting which affects output signals from the i.LINK (HDV/DV) connector, such as "System" of the OTHERS menu or "SDI/HDMI/i.LINK I/O Select" and "Down Converter" of the VIDEO SET menu, disconnect the i.LINK cable then change the setting. Changing such a setting with the i.LINK cable connected may cause improper operation of the connected i.LINK device.
- When "Wi-Fi&Proxy/USB" is set to "Wi-Fi&Proxy," signals are not input/output from the i.LINK connector.

i.LINK and i are trademarks.

Recording the Camcorder Picture on an External Device

While recording (or standing by to record), the picture being shot with this camcorder is output as an HDV or DVCAM stream via the i.LINK (HDV/DV) connector. It can be recorded on a connected HDV or DVCAM recorder in synchronization with the REC START/STOP operation on this camcorder.

1 Perform the preparatory settings of the camcorder.

- "SDI/HDMI/i.LINK I/O Select" *(page 93)* of the VIDEO SET menu
- "Trigger Mode" *(page 104)* of the OTHERS menu

2 Set the external device to recording standby status.

3 Start recording with the camcorder.

The external device starts recording in synchronization.

The status of the external device is displayed in the i.LINK status indication area *(page 13)* on the LCD monitor/EVF screen.

Indication	Status of the external device
STBY i HDV	In HDV recording standby
●REC i HDV	In HDV recording
STBY i DV	In DV recording standby
●REC i DV	In DV recording

Notes

- Operation may be different depending on the type of external device.
- There is some time lag from when you start recording until the i.LINK status indication changes. Recording does not start on the connected i.LINK device before it enters synchronization even if "Trigger Mode" is set to "Both."
- While you can record shot marks on the memory card during recording, they are not added to the pictures recorded on the external device.

Nonlinear Editing

When the camcorder is displaying thumbnails or in playback mode, you can transfer an HDV stream to a nonlinear editing system connected via the i.LINK (HDV/DV) connector.

Notes

- The i.LINK (HDV/DV) connector of this camcorder is a 4-pin connector. Check the number of pins of the i.LINK connector on your computer and use an appropriate i.LINK cable.
- In searching pictures of this camcorder on the computer, it may take some time until the display is reflected on the computer.
- If the playback clip is short or the playback starting point is near the end of the clip, the i.LINK signal may be interrupted between the clip and the next clip. When you try to capture such a signal using the nonlinear editing system, a malfunction may occur, depending on the nonlinear editing software in use.
- If you specify a search speed other than 4, 15, or 24 times normal with the nonlinear editing system, no i.LINK signal is fed out. In such a case, the picture on the LCD monitor may stay frozen.
- High-speed playback picture may not be displayed on the computer screen, depending on the nonlinear editing software in use.

Setting on this camcorder

Set "SDI/HDMI/i.LINK I/O Select" *(page 93)* of the VIDEO SET menu to "HDV" or "DVCAM."

Recording External Input Signals

The input from a device connected via the i.LINK (HDV/DV) connector can be recorded on an SxS memory card in this camcorder. The timecodes superimposed on the i.LINK input are recorded regardless of the settings of the camcorder.

1 Set the external signal to a format that can be recorded on the camcorder.

Depending on the video format *(page 105)* setting of this unit, recordable input signals are as follows:

- FAT HD Mode
  SP 1440×1080/59.94i or SP 1440×1080/23.98P: HDV stream signal of 1440×1080/59.94i
  SP 1440×1080/50i: HDV stream signal of 1440×1080/50i
- FAT SD Mode
  DVCAM59.94i, 29.97P SQ/EC: DVCAM stream signal of 720×480/59.94i
  DVCAM50i, 25P SQ/EC: DVCAM stream signal of 720×576/50i

Other video formats and combination of input signals cannot be recorded.

2 Set "SDI/HDMI/i.LINK I/O Select" *(page 93)* of the VIDEO SET menu to "HDV."

3 Set "Input Source Select" *(page 93)* of the VIDEO SET menu to "i.LINK."

The input image is displayed on the LCD monitor/EVF screen and the monitor connected via the VIDEO OUT connector.
The audio signal is output from the built-in speaker, headphones connected to the headphone connector, and the speaker of the monitor connected to the AUDIO OUT connector.

4 Press the REC START/STOP button *(page 9)* or the REC START button *(page 12)*.

Recording begins.

Notes

- An error is generated in the following cases. In such a case, cancel Recording mode by pressing the REC START/STOP button.
  —The video format of input signal does not match that specified on the camcorder.
  —A copy-protected stream is being fed in.
- If the input to the camcorder becomes no signal during recording, the tally lamps and the i.LINK ●REC status indication on the LCD monitor/EVF screen flash, indicating that no signal is being recorded on the SxS memory card.
  When an input signal is resumed, recording is restarted, incrementing the clip number on the memory card.

External Synchronization

When multiple units of the camcorder are used in the same shooting location, recording can be made in synchronization with a specific reference signal, and the timecode can be matched among all the units.

Aligning the phase of the video signal (Genlock)

Genlock operation is enabled by supplying a reference signal to the GENLOCK IN connector *(page 11)* of the camcorder.
Valid reference signals depend on the video format selected.

For "NTSC/NTSC(J) Area"

MXF

Video format	Valid reference signal
XAVC-L50 1080/59.94P XAVC-L35 1080/59.94P XAVC-I 1080/59.94i XAVC-L50 1080/59.94i XAVC-L35 1080/59.94i XAVC-L25 1080/59.94i XAVC-I 1080/29.97P XAVC-L50 1080/29.97P XAVC-L35 1080/29.97P XAVC-I 1080/23.98P 1) XAVC-L50 1080/23.98P 1) XAVC-L35 1080/23.98P 1) HD422 50/1080/59.94i HQ 1920×1080/59.94i HQ 1440×1080/59.94i HD422 50/1080/29.97P HQ 1920×1080/29.97P HQ 1440×1080/29.97P HD422 50/1080/23.98P 1) HQ 1920×1080/23.98P 1) HQ 1440×1080/23.98P 1)	1080/59.94i NTSC
XAVC-I 1080/23.98P 2) XAVC-L50 1080/23.98P 2) XAVC-L35 1080/23.98P 2) HD422 50/1080/23.98P 2) HQ 1920×1080/23.98P 2) HQ 1440×1080/23.98P 2)	1080/23.98PsF NTSC
XAVC-I 720/59.94P XAVC-L50 720/59.94P HD422 50/720/59.94P HQ 1280×720/59.94P HD422 50/720/29.97P HD422 50/720/23.98P HQ 1280×720/23.98P	1080/59.94i 720/59.94P NTSC
IMX50 59.94i SQ/EC IMX50 29.97P SQ/EC DVCAM 59.94i SQ/EC DVCAM 29.97P SQ/EC	1080/59.94i NTSC

1) 23.98P Output: 59.94i (2-3 Pull Down))
2) 23.98P Output: 23.98PsF

MP4

Video format	Valid reference signal
HQ 1920×1080/59.94i HQ 1440×1080/59.94i SP 1440×1080/59.94i HQ 1920×1080/29.97P HQ 1440×1080/29.97P HQ 1920×1080/23.98P 1) HQ 1440×1080/23.98P 1) SP 1440×1080/23.98P	1080/59.94i NTSC
HQ 1920×1080/23.98P 2) HQ 1440×1080/23.98P 2)	1080/23.98PsF NTSC
HQ 1280×720/59.94P HQ 1280×720/29.97P HQ 1280×720/23.98P	1080/59.94i 720/59.94P NTSC

1) 23.98P Output: 59.94i (2-3 Pull Down))
2) 23.98P Output: 23.98PsF

AVI

Video format	Valid reference signal
DVCAM 59.94i SQ/EC DVCAM 29.97P SQ/EC	1080/59.94i NTSC

For "PAL Area"

MXF

Video format	Valid reference signal
XAVC-L50 1080/50P XAVC-L35 1080/50P XAVC-I 1080/50i XAVC-L50 1080/50i XAVC-L35 1080/50i XAVC-L25 1080/50i XAVC-I 1080/25P XAVC-L50 1080/25P XAVC-L35 1080/25P HD422 50/1080/50i HQ 1920×1080/50i HQ 1440×1080/50i HD422 50/1080/25P HQ 1920×1080/25P HQ 1440×1080/25P	1080/50i PAL
XAVC-I 720/50P XAVC-L50 720/50P HD422 50/720/50P HQ 1280×720/50P HD422 50/720/25P	1080/50i 720/50P PAL
IMX50 50i SQ/EC IMX50 25P SQ/EC DVCAM 50i SQ/EC DVCAM 25P SQ/EC	1080/50i PAL

MP4

Video format	Valid reference signal
HQ 1920×1080/50i HQ 1440×1080/50i SP 1440×1080/50i HQ 1920×1080/25P HQ 1440×1080/25P	1080/50i PAL
HQ 1280×720/50P HQ 1280×720/25P	1080/50i 720/50P PAL

AVI

Video format	Valid reference signal
DVCAM 50i SQ/EC DVCAM 25P SQ/EC	1080/50i PAL

The phase adjustment for the reference signal can also be made with "Genlock" *(page 104)* of the OTHERS menu.

Notes

- When the output format is SD Mode and you use one of the video formats below, genlock is not possible. Set the video format to HD Mode.
  MXF: XAVC-I 720/59.94P
  XAVC-L50 720/59.94P
  HD422 50/720/59.94P
  HQ 1280×720/59.94P
  XAVC-I 720/50P
  XAVC-L50 720/50P
  HD422 50/720/50P
  HQ 1280×720/50P
  MP4: HQ 1280×720/59.94P
  HQ 1280×720/50P
- If the reference signal is unstable, genlock is not possible.
- The subcarrier is not synchronized.

Synchronizing the timecode of your camcorder with that of another unit

Set the unit that supplies the timecode to a mode in which the timecode output keeps advancing (Free Run or Clock mode).

1 Set "Timecode" of the TC/UB SET menu as follows:

Mode: Preset
Run: Free Run

2 Press the DURATION/TC/U-BIT button *(page 9)* so that the timecode is displayed on the screen.

3 Confirm that the IN/OUT switch *(page 11)* is set to IN, then supply an HD or SD reference video signal to the GENLOCK IN connector and the reference timecode to the TC IN connector.

The built-in timecode generator of your camcorder locks to the reference timecode, and the message "EXT-LK" is displayed on the screen.
About 10 seconds after locking, even if the reference timecode from the external device is disconnected, the external lock will be kept.

Notes

- Check that the reference timecode and the reference video signal are in a phase relation that complies the SMPTE timecode standards.
- When you finish the above procedure, the timecode is immediately synchronized with the external timecode, and the time data indication will show the value of the external timecode. However, wait for a few seconds

until the timecode generator stabilizes before recording.
- If the frequency of the reference video signal and the frame frequency are not the same, a lock cannot be acquired, and the camcorder will not operate properly. In such a case, the timecode will not be correctly locked to the external timecode.
- When the connection is removed, the timecode advance may shift one frame per hour with respect to the reference timecode.

To release the external timecode synchronization

Change the "Timecode" setting of the TC/UB SET menu or set the camcorder to off.
External synchronization is also released when you start recording in a special recording mode (Slow & Quick Motion, Frame Rec, or Interval Rec).

Synchronizing the timecode of another unit with that of your camcorder

1 Specify the timecode of your camcorder with "Timecode" and "TC Format" of the TC/UB SET menu *(page 34)*.

2 Confirm that the IN/OUT switch *(page 11)* is set to OUT, then connect the TC OUT connector and VIDEO OUT connector *(page 11)* with the timecode input and reference signal input of the other unit, respectively.

The timecode to be output from the TC OUT connector depends on the setting of "TC Out" in "Timecode" of the TC/UB SET menu. If "TC Out" is set to "Generator," the timecode generated by the timecode generator of the camcorder is output during recording and playback. If "TC Out" is set to "Auto," the timecode generated by the timecode generator is output during recording, and that superimposed with the video signal is output during playback.

Important Notes on Operation

Use and Storage

Do not subject the unit to severe shock

- The internal mechanism may be damaged or the body warped.
- If an accessory mounted on the accessory shoe is subjected to severe shock, the accessory shoe may be damaged. In such a case, stop using it and contact your dealer or a Sony service representative.

Do not cover the unit while operating

Putting a cloth, for example, over the unit can cause excessive internal heat build-up.

After use

Always set the power switch to OFF.

Before storing the unit for a long period

Remove the battery pack.

Grip the handle when carrying

Grip the handle to carry. If you carry it by other parts, such as the front microphone block or the LCD monitor block, the camcorder may drop, causing injury.

Do not leave the camcorder with the lenses facing the sun

Direct sunlight can enter through the lenses, be focused in the camcorder, and cause fire.

Shipping

- Remove the memory cards before transporting the unit.
- If sending the unit by truck, ship, air or other transportation service, pack it in the shipping carton of the unit.

Care of the unit

Remove dust and dirt from the surfaces of the lens using a blower.
If the body of the unit is dirty, clean it with a soft, dry cloth. In extreme cases, use a cloth steeped in a little neutral detergent, then wipe dry. Do not use organic solvents such as alcohol or thinner, as these may cause discoloration or other damage to the finish of the unit.

In the event of operating problems

If you should experience problems with the unit, contact your Sony dealer.

The fan and battery are consumable parts that will need periodic replacement

The fan and battery are consumable parts that will need periodic replacement.
When operating at room temperature, a normal replacement cycle will be about 5 years.
However, this replacement cycle represents only a general guideline and does not imply that the life expectancy of these parts is guaranteed. For details on parts replacement, contact your dealer.

Use and storage locations

Store in a level, ventilated place. Avoid using or storing the unit in the following places:

- In excessive heat or cold (operating temperature range: 0ºC to 40ºC or 32ºF to 104ºF)
  Remember that in summer in warm climates the temperature inside a car with the windows closed can easily exceed 50ºC (122ºF).
- In damp or dusty locations
- Locations where the unit may be exposed to rain
- Locations subject to violent vibration
- Near strong magnetic fields
- Close to radio or TV transmitters producing strong electromagnetic fields.
- In direct sunlight or close to heaters for extended periods

To prevent electromagnetic interference from portable communications devices

The use of portable telephones and other communications devices near this unit can result in malfunctions and interference with audio and video signals.
It is recommended that the portable communications devices near this unit be powered off.

Note on laser beams

Laser beams may damage the CMOS image sensors. If you shoot a scene that includes a laser beam, be careful not to let the laser beam be directed into the lens of the camcorder.

About the LCD panels

The LCD panel fitted to this unit is manufactured with high precision technology, giving a functioning pixel ratio of at least 99.99%. Thus a very small proportion of pixels may be “stuck”, either always off (black), always on (red, green, or blue), or flashing. In addition, over a long period of use, because of the physical characteristics of the liquid crystal display, such “stuck” pixels may appear spontaneously. These problems are not a malfunction. Note that any such problems have no effect on recorded data.

On condensation

If the unit is suddenly taken from a cold to a warm location, or if ambient temperature suddenly rises, moisture may form on the outer surface of the unit and/or inside of the unit. This is known as condensation. If condensation occurs, turn off the unit and wait until the condensation clears before operating the unit. Operating the unit while condensation is present may damage the unit.

Phenomena specific to CMOS image sensors

The following phenomena that may appear in images are specific to CMOS (Complementary Metal Oxide Semiconductor) image sensors. They do not indicate malfunctions.

White flecks

Although the CMOS image sensors are produced with high-precision technologies, fine white flecks may be generated on the screen in rare cases, caused by cosmic rays, etc.
This is related to the principle of CMOS image sensors and is not a malfunction.

The white flecks especially tend to be seen in the following cases:

- when operating at a high environmental temperature
- when you have raised the master gain (sensitivity)
- when operating in Slow-Shutter mode

Aliasing

When fine patterns, stripes, or lines are shot, they may appear jagged or flicker.

Flicker

If recording is made under lighting produced by discharge tubes, such as fluorescent, sodium, or mercury-vapor lamps, the screen may flicker, colors may vary, or horizontal stripes may appear distorted.

In such cases, set the Flicker-Reduction function to Auto mode *(page 33)*.
In some cases, such phenomena may not be improved with the Flicker-Reduction function.
It is recommend to set the electronic shutter speed to 1/100 sec. in 50-Hz areas and to 1/60 in 60-Hz areas.

Focal plane

Owing to the characteristics of the pickup elements (CMOS sensors) for reading video signals, subjects that quickly move across the screen may appear slightly skewed.

Flash band

The luminance at the top and bottom of the screen may change when shooting a flashlight beam or a light source that quickly flashes.

Note on the EVF display

- Pictures on the LCD monitor and EVF screen may be distorted by the following operations:
  —Changing the video format
  —Rec Review
  —Starting playback from the Thumbnail screen
  —Reversing the LCD monitor
  —Switching the Expanded Focus display
- When you change the eye direction in the EVF, you may see primary colors red, green, and blue, but this is not a defect of the camcorder. These primary colors are not recorded on any recording media.

Fragmentation

If pictures cannot be recorded/reproduced properly, try formatting the recording medium. While repeating picture recording/playback with a certain recording medium for an extended period, files in the medium may be fragmented, disabling proper recording/storage. In such a case, make a backup of clips in the medium then perform formatting of the medium using "Format Media" *(page 107)* of the OTHERS menu.

Notes on security

SONY WILL NOT BE LIABLE FOR DAMAGES OF ANY KIND RESULTING FROM A FAILURE TO IMPLEMENT PROPER SECURITY MEASURES ON TRANSMISSION DEVICES, UNAVOIDABLE DATA LEAKS RESULTING FROM TRANSMISSION SPECIFICATIONS, OR SECURITY PROBLEMS OF ANY KIND.

Video Format (Format)

The video formats that can be selected at “Format” in “System” *(page 105)* of the OTHERS menu are listed below. The default settings set at the factory are shown in bold face (example: **HD422 50/1080/59.94i**)

UDF HD Mode

Country setting	NTSC Area/NTSC(J) Area	PAL Area
Selectable video format	**HD422 50/1080/59.94i** HQ 1920×1080/59.94i HQ 1440×1080/59.94i HD422 50/1080/29.97P HQ 1920×1080/29.97P HQ 1440×1080/29.97P HD422 50/1080/23.98P HQ 1920×1080/23.98P HQ 1440×1080/23.98P HD422 50/720/59.94P HQ 1280×720/59.94P HD422 50/720/29.97P HD422 50/720/23.98P HQ 1280×720/23.98P	**HD422 50/1080/50i** HQ 1920×1080/50i HQ 1440×1080/50i HD422 50/1080/25P HQ 1920×1080/25P HQ 1440×1080/25P HD422 50/720/50P HQ 1280×720/50P HD422 50/720/25P

UDF SD Mode

Country setting	NTSC Area/NTSC(J) Area	PAL Area
Selectable video format	**IMX50 59.94i SQ** IMX50 59.94i EC DVCAM 59.94i SQ DVCAM 59.94i EC IMX50 29.97P SQ IMX50 29.97P EC DVCAM 29.97P SQ DVCAM 29.97P EC	**IMX50 50i SQ** IMX50 50i EC DVCAM 50i SQ DVCAM 50i EC IMX50 25P SQ IMX50 25P EC DVCAM 25P SQ DVCAM 25P EC

exFAT HD Mode

Country setting	NTSC Area/NTSC(J) Area	
MXF file format	XAVC	MPEG2
Selectable video format	XAVC-L50 1080/59.94P XAVC-L35 1080/59.94P **XAVC-I 1080/59.94i** XAVC-L50 1080/59.94i XAVC-L35 1080/59.94i XAVC-L25 1080/59.94i XAVC-I 1080/29.97P XAVC-L50 1080/29.97P XAVC-L35 1080/29.97P XAVC-I 1080/23.98P XAVC-L50 1080/23.98P XAVC-L35 1080/23.98P XAVC-I 720/59.94P XAVC-L50 720/59.94P	**HD422 50/1080/59.94i** HQ 1920×1080/59.94i HQ 1440×1080/59.94i HD422 50/1080/29.97P HQ 1920×1080/29.97P HQ 1440×1080/29.97P HD422 50/1080/23.98P HQ 1920×1080/23.98P HQ 1440×1080/23.98P HD422 50/720/59.94P HQ 1280×720/59.94P HD422 50/720/29.97P HD422 50/720/23.98P HQ 1280×720/23.98P

Country setting	PAL Area	
MXF file format	XAVC	MPEG2
Selectable video format	XAVC-L50 1080/50P XAVC-L35 1080/50P **XAVC-I 1080/50i** XAVC-L50 1080/50i XAVC-L35 1080/50i XAVC-L25 1080/50i XAVC-I 1080/25P XAVC-L50 1080/25P XAVC-L35 1080/25P XAVC-I 720/50P XAVC-L50 720/50P	**HD422 50/1080/50i** HQ 1920×1080/50i HQ 1440×1080/50i HD422 50/1080/25P HQ 1920×1080/25P HQ 1440×1080/25P HD422 50/720/50P HQ 1280×720/50P HD422 50/720/25P

exFAT SD Mode

Country setting	NTSC Area/NTSC(J) Area	PAL Area
Selectable video format	**DVCAM 59.94i SQ** DVCAM 59.94i EC DVCAM 29.97P SQ DVCAM 29.97P EC	**DVCAM 50i SQ** DVCAM 50i EC DVCAM 25P SQ DVCAM 25P EC

FAT HD Mode

Country setting	NTSC Area/NTSC(J) Area	PAL Area
Selectable video format	**HQ 1920×1080/59.94i** HQ 1440×1080/59.94i SP 1440×1080/59.94i HQ 1920×1080/29.97P HQ 1440×1080/29.97P HQ 1920×1080/23.98P HQ 1440×1080/23.98P SP 1440×1080/23.98P HQ 1280×720/59.94P HQ 1280×720/29.97P HQ 1280×720/23.98P	**HQ 1920×1080/50i** HQ 1440×1080/50i SP 1440×1080/50i HQ 1920×1080/25P HQ 1440×1080/25P HQ 1280×720/50P HQ 1280×720/25P

FAT SD Mode

Country setting	NTSC Area/NTSC(J) Area	PAL Area
Selectable video format	**DVCAM 59.94i SQ** DVCAM 59.94i EC DVCAM 29.97P SQ DVCAM 29.97P EC	**DVCAM 50i SQ** DVCAM 50i EC DVCAM 25P SQ DVCAM 25P EC

Formats and Limitations of Outputs

Video Formats and Output Signals

Output formats for the SDI OUT connector

Serial digital signals from the SDI OUT connector are output depending on the settings of the setup menu and format of the clip being played.
The output format is converted when using the settings in the following chart.

Notes

- When the format is UDF HD Mode, exFAT HD Mode, or FAT HD Mode and "SDI/HDMI/i.LINK I/O Select" of the VIDEO SET menu is set to "SD SDI & SD HDMI i," a down-converted SD signal is output.
- When "SDI/HDMI/i.LINK I/O Select" in the VIDEO SET menu is set to other than "3G SDI & HD HDMI," "HD SDI & HD HDMI," or "SD SDI & SD HDMI i," signals are not output from the SDI OUT connector.

While recording or standing by to record

Input format	Output format	
"Format" in "System" of the OTHERS menu	Setting of "SDI/HDMI/i.LINK I/O Select" of the VIDEO SET menu	
	3G SDI & HD HDMI HD SDI & HD HDMI	SD SDI & SD HDMI i
59.94P (XAVC-L)	1920×1080/59.94P 1) 1920×1080/59.94i 4)	SD/59.94i 4)
59.94i (XAVC-I/XAVC-L/HD/HQ/SP)	1920×1080/59.94i	SD/59.94i
29.97P (XAVC-I/XAVC-L/HD/HQ)	1920×1080/29.97PsF 1280×720/59.94P 5)	SD/29.97PsF
23.98P (XAVC-I/XAVC-L/HD/HQ)	1920×1080/59.94i 2) 1920×1080/23.98PsF 3) 1280×720/59.94P 5)	SD/59.94i
23.98P(SP)	1920×1080/59.94i	
59.94P (XAVC-I/XAVC-L/HD/HQ)	1280×720/59.94P	SD/59.94i 4)
59.94i (DVCAM/IMX)	–	SD/59.94i
29.97P (DVCAM/IMX)	–	SD/29.97PsF
50P (XAVC-L)	1920×1080/50P 1) 1920×1080/50i 4)	SD/50i 4)
50i (XAVC-I/XAVC-L/HD/HQ/SP)	1920×1080/50i	SD/50i
25P (XAVC-I/XAVC-L/HD/HQ)	1920×1080/25PsF 1280×720/50P 5)	SD/25PsF
50P (XAVC-I/XAVC-L/HD/HQ)	1280×720/50P	SD/50i 4)
50i (DVCAM/IMX)	–	SD/50i
25P (DVCAM/IMX)	–	SD/25PsF

1) For 3G SDI & HD HDMI.
2) When "23.98P OUTPUT" of the VIDEO SET menu is set to "59.94i(2-3 Pull Down)."
3) When "23.98P OUTPUT" of the VIDEO SET menu is set to "23.98PsF."
4) Converted to interlace from progressive.
5) When the format is 720.

During clip playback

Format of the played clip	Output format	
	Setting of "SDI/HDMI/i.LINK I/O Select" of the VIDEO SET menu	
	3G SDI & HD HDMI HD SDI & HD HDMI	SD SDI & SD HDMI i
59.94P (XAVC-I/XAVC-L)	1920×1080/59.94P 1) 1920×1080/59.94i 4)	SD/59.94i 4)
59.94i (XAVC-I/XAVC-L/HD/HQ/SP)	1920×1080/59.94i	SD/59.94i
29.97P (XAVC-I/XAVC-L/HD/HQ)	1920×1080/29.97PsF 1280×720/59.94P 1)	SD/29.97PsF
23.98P (XAVC-I/XAVC-L/HD/HQ)	1920×1080/59.94i 2) 1920×1080/23.98PsF 3) 1280×720/59.94P 6)	SD/59.94i
23.98P (SP)	1920×1080/59.94i	
59.94P (XAVC-I/XAVC-L/HD/HQ)	1280×720/59.94P	SD/59.94i 4)
59.94i (DVCAM/IMX)	–	SD/59.94i
29.97P (DVCAM/IMX)	–	SD/29.97PsF
50P (XAVC-I/XAVC-L)	1920×1080/50P 1) 1920×1080/50i 4)	SD/50i 4)
50i (XAVC-I/XAVC-L/HD/HQ/SP)	1920×1080/50i	SD/50i
25P (XAVC-I/XAVC-L/HD/HQ)	1920×1080/25PsF 1280×720/50P 5)	SD/25PsF
50P (XAVC-I/XAVC-L/HD/HQ)	1280×720/50P	SD/50i 4)
50i (DVCAM/IMX)	–	SD/50i
25P (DVCAM/IMX)	–	SD/25PsF

1) For 3G SDI & HD HDMI.
2) When "23.98P OUTPUT" of the VIDEO SET menu is set to "59.94i(2-3 Pull Down)" and the format of the played clip is 1080.
3) When "23.98P OUTPUT" of the VIDEO SET menu is set to "23.98PsF" and the format of the played clip is 1080.
4) Converted to interlace from progressive.
5) When the format is 720.
6) When the format of the played clip is 720. When playing a PureP clip that is recorded in FAT/HQ 1280×720/23.98P, it is played by pull-down automatically.

When a thumbnail screen is displayed

Input format	Output format	
"Format" in "System" of the OTHERS menu	Setting of "SDI/HDMI/i.LINK I/O Select" of the VIDEO SET menu	
	3G SDI & HD HDMI HD SDI & HD HDMI	SD SDI & SD HDMI i
59.94P (XAVC-I/XAVC-L)	1920×1080/59.94i 3)	SD/59.94i 3)
59.94i (XAVC-I/XAVC-L/HD/HQ/SP)	1920×1080/59.94i 1280×720/59.94P 4)	SD/59.94i
29.97P (XAVC-I/XAVC-L/HD/HQ)		
23.98P (XAVC-I/XAVC-L/HD/HQ)	1920×1080/59.94i 1) 1920×1080/23.98PsF 2) 1280×720/59.94P 4)	
23.98P (SP)	1920×1080/59.94i	
59.94P (XAVC-I/XAVC-L/HD/HQ)	1280×720/59.94P	SD/59.94i 3)
59.94i (DVCAM/IMX)	–	SD/59.94i
29.97P (DVCAM/IMX)	–	
50P (XAVC-I/XAVC-L)	1920×1080/50i 3)	SD/50i 3)
50i (XAVC-I/XAVC-L/HD/HQ/SP)	1920×1080/50i 1280×720/50P 4)	SD/50i
25P (XAVC-I/XAVC-L/HD/HQ)		
50P (XAVC-I/XAVC-L/HD/HQ)	1280×720/50P	SD/50i 3)
50i (DVCAM/IMX)	–	SD/50i
25P (DVCAM/IMX)	–	

1) When "23.98P OUTPUT" of the VIDEO SET menu is set to "59.94i(2-3 Pull Down)."
2) When "23.98P OUTPUT" of the VIDEO SET menu is set to "23.98PsF."
3) Converted to interlace from progressive.
4) When the format is 720.

Output formats from the HDMI OUT connector

Serial digital signals from the HDMI OUT connector are output depending on the settings of the setup menu and format of the clip being played.
The output format is converted when using the settings in the following chart.

Note

When the format is UDF HD Mode, exFAT HD Mode, or FAT HD Mode and "SDI/HDMI/i.LINK I/O Select" of the VIDEO SET menu is set to "SD SDI & SD HDMI i," a down-converted SD signal is output.

While recording or standing by to record

Input format	Output format		
	Setting of "SDI/HDMI/i.LINK I/O Select" of the VIDEO SET menu		
"Format" in "System" of the OTHERS menu	3G SDI & HD HDMI HD SDI & HD HDMI HD HDMI & HDV	SD SDI & SD HDMI i SD HDMI i & HDV SD HDMI i & DVCAM	SD HDMI P & HDV SD HDMI P
59.94P (XAVC-L)	1920×1080/59.94i 1)	SD/59.94i 1)	SD/59.94P
59.94i (XAVC-I/XAVC-L/HD/HQ/SP)	1920×1080/59.94i	SD/59.94i	SD/59.94P 2)
29.97P (XAVC-I/XAVC-L/HD/HQ)	1920×1080/29.97PsF 1280×720/59.94P 3)	SD/29.97PsF	SD/59.94P
23.98P (XAVC-I/XAVC-L/HD/HQ/SP)	1920×1080/59.94i 1280×720/59.94P 3)	SD/59.94i	
59.94P (XAVC-I/XAVC-L/HD/HQ)	1280×720/59.94P	SD/59.94i 1)	
59.94i (DVCAM/IMX)	–	SD/59.94i	–
29.97P (DVCAM/IMX)	–	SD/29.97PsF	–
50P (XAVC-L)	1920×1080/50i 1)	SD/50i 1)	SD/50P
50i (XAVC-I/XAVC-L/HD/HQ/SP)	1920×1080/50i	SD/50i	SD/50P 2)
25P (XAVC-I/XAVC-L/HD/HQ)	1920×1080/25PsF 1280×720/50P 3)	SD/25PsF	SD/50P
50P (XAVC-I/XAVC-L/HD/HQ)	1280×720/50P	SD/50i 1)	
50i (DVCAM/IMX)	–	SD/50i	–
25P (DVCAM/IMX)	–	SD/25PsF	–

1) Converted to interlace from progressive.
2) Converted to progressive from interlace.
3) When the format is 720.

During clip playback

Format of the played clip	Output format		
	Setting of "SDI/HDMI/i.LINK I/O Select" of the VIDEO SET menu		
	3G SDI & HD HDMI HD SDI & HD HDMI HD HDMI & HDV	SD SDI & SD HDMI i SD HDMI i & HDV SD HDMI i & DVCAM	SD HDMI P & HDV SD HDMI P
59.94P (XAVC-I/XAVC-L)	1920×1080/59.94i 1)	SD/59.94i 1)	SD/59.94P
59.94i (XAVC-I/XAVC-L/HD/HQ/SP)	1920×1080/59.94i	SD/59.94i	SD/59.94P 2)
29.97P (XAVC-I/XAVC-L/HD/HQ)	1920×1080/29.97PsF 1280×720/59.94P 3)	SD/29.97PsF	SD/59.94P
23.98P (XAVC-I/XAVC-L/HD/HQ/SP)	1920×1080/59.94i 1280×720/59.94P 4)	SD/59.94i	
59.94P (XAVC-I/XAVC-L/HD/HQ)	1280×720/59.94P	SD/59.94i 3)	
59.94i (DVCAM/IMX)	–	SD/59.94i	–
29.97P (DVCAM/IMX)	–	SD/29.97PsF	–
50P (XAVC-I/XAVC-L)	1920×1080/50i 1)	SD/50i 1)	SD/50P
50i (XAVC-I/XAVC-L/HD/HQ/SP)	1920×1080/50i	SD/50i	SD/50P 2)
25P (XAVC-I/XAVC-L/HD/HQ)	1920×1080/25PsF 1280×720/50P 3)	SD/25PsF	SD/50P
50P (XAVC-I/XAVC-L/HD/HQ)	1280×720/50P	SD/50i 1)	
50i (DVCAM/IMX)	–	SD/50i	–
25P (DVCAM/IMX)	–	SD/25PsF	–

1) Converted to interlace from progressive.
2) Converted to progressive from interlace.
3) When the format is 720.
4) When the format of the played clip is 720. When playing a PureP clip that is recorded in FAT/HQ 1280×720/23.98P, it is played by pull-down automatically.

When a thumbnail screen is displayed

Input format	Output format		
	Setting of "SDI/HDMI/i.LINK I/O Select" of the VIDEO SET menu		
"Format" in "System" of the OTHERS menu	3G SDI & HD HDMI HD SDI & HD HDMI HD HDMI & HDV	SD SDI & SD HDMI i SD HDMI i & HDV SD HDMI i & DVCAM	SD HDMI P & HDV SD HDMI P
59.94P (XAVC-I/XAVC-L)	1920×1080/59.94i 1)	SD/59.94i 1)	SD/59.94P
59.94i (XAVC-I/XAVC-L/HD/HQ/SP)	1920×1080/59.94i	SD/59.94i	SD/59.94P 2)
29.97P (XAVC-I/XAVC-L/HD/HQ)	1920×1080/59.94i 1280×720/59.94P 3)		SD/59.94P
23.98P (XAVC-I/XAVC-L/HD/HQ)	1920×1080/59.94i 1280×720/59.94P 3)		
59.94P (XAVC-I/XAVC-L/HD/HQ)	1280×720/59.94P	SD/59.94i 1)	
59.94i (DVCAM/IMX)	–	SD/59.94i	–
29.97P (DVCAM/IMX)	–		–
50P (XAVC-I/XAVC-L)	1920×1080/50i 1)	SD/50i 1)	SD/50P

Input format	Output format		
	Setting of “SDI/HDMI/i.LINK I/O Select” of the VIDEO SET menu		
“Format” in “System” of the OTHERS menu	3G SDI & HD HDMI HD SDI & HD HDMI HD HDMI & HDV	SD SDI & SD HDMI i SD HDMI i & HDV SD HDMI i & DVCAM	SD HDMI P & HDV SD HDMI P
50i (XAVC-I/XAVC-L/HD/HQ/SP)	1920×1080/50i	SD/50i	SD/50P 2)
25P (XAVC-I/XAVC-L/HD/HQ)	1920×1080/50i 1280×720/50P 3)		SD/50P
50P (XAVC-I/XAVC-L/HD/HQ)	1280×720/50P	SD/50i 2)	
50i (DVCAM/IMX)	–	SD/50i	–
25P (DVCAM/IMX)	–		–

1) Converted to interlace from progressive.
2) Converted to progressive from interlace.
3) When the format is 720.

Output formats from the VIDEO OUT connector

Signals output from the VIDEO OUT connector are either the HD-Y signals output from the SDI OUT connector/HDMI OUT connector (when outputting HD from the SDI OUT connector or HDMI OUT connector), or analog composite signals (when outputting SD from the SDI OUT connector or HDMI OUT connector).
Signals of clips recorded in a different system from the setting of “Country” in “System” of the OTHERS menu are converted to the following frame rates for simplified playback before output.

When you play clips recorded with the PAL system while the “Country” is set to “NTSC Area/NTSC(J) Area.”

Some frames may be repeated due to frame rate conversion.

Playback clip video format	VIDEO OUT Output format	
	HD-Y	Analog composite
XAVC-L50 1080/50P XAVC-L35 1080/50P XAVC-I 1080/50i XAVC-L50 1080/50i XAVC-L35 1080/50i XAVC-L25 1080/50i HD422 50/1080/50i HQ 1920×1080/50i HQ 1440×1080/50i SP 1440×1080/50i	1920×1080/60i	SD/59.94i
XAVC-I 1080/25P XAVC-L50 1080/25P XAVC-L35 1080/25P HD422 50/1080/25P HQ 1920×1080/25P HQ 1440×1080/25P	1920×1080/30PsF	SD/29.97PsF
XAVC-I 720/50P XAVC-L50 720/50P HD422 50/720/50P HQ 1280×720/50P	1280×720/60P	SD/59.94i
HD422 50/720/25P HQ 1280×720/25P		SD/29.97PsF

Playback clip video format	VIDEO OUT Output format	
	HD-Y	Analog composite
DVCAM50i SQ/EC	Cannot be played	Cannot be played
DVCAM25P SQ/EC		
IMX50/50i SQ/EC		
IMX50/25P SQ/EC		

When you play clips recorded with the NTSC system while the "Country" is set to "PAL Area."

Some frames may be deleted due to frame rate conversion.

Playback clip video format	VIDEO OUT Output format	
	HD-Y	Analog composite
XAVC-L50 1080/59.94P XAVC-L35 1080/59.94P XAVC-I 1080/59.94i XAVC-L50 1080/59.94i XAVC-L35 1080/59.94i XAVC-L25 1080/59.94i HD422 50/1080/59.94i HQ 1920×1080/59.94i HQ 1440×1080/59.94i SP 1440×1080/59.94i	1920×1080/49.95i	SD/50i
XAVC-I 1080/29.97P XAVC-L50 1080/29.97P XAVC-L35 1080/29.97P HD422 50/1080/29.97P HQ 1920×1080/29.97P HQ 1440×1080/29.97P	1920×1080/24.97PsF	SD/25PsF
XAVC-I 1080/23.98P XAVC-L50 1080/23.98P XAVC-L35 1080/23.98P HD422 50/1080/23.98P HQ 1920×1080/23.98P HQ 1440×1080/23.98P SP 1440×1080/23.98P		
XAVC-I 720/59.94P XAVC-L50 720/59.94P HD422 50/720/59.94P HQ 1280×720/59.94P	1280×720/49.95P	SD/50i
HD422 50/720/29.97P HQ 1280×720/29.97P HD422 50/720/23.98P HQ 1280×720/23.98P		SD/25PsF
DVCAM59.94i SQ/EC	Cannot be played	Cannot be played
DVCAM29.97P SQ/EC		
IMX50/59.94i SQ/EC		
IMX50/29.97P SQ/EC		

Output formats from the i.LINK I/O connector

Serial digital signals from the i.LINK I/O connector are output in the following formats depending on the settings of the setup menu and format of the clip being played.

Notes

- When “F.Sys.” in the OTHERS menu is set to “UDF” or “exFAT,” signals are not output from the i.LINK I/O connector.
- When “SDI/HDMI/i.LINK I/O Select” of the VIDEO SET menu is set to “3G SDI & HD HDMI,” “HD SDI & HD HDMI,” “SD SDI & SD HDMI i,” or “SD HDMI P,” signals are not output from the i.LINK I/O connector.

While recording (or standing by to record)/When playing a clip

When recording: “Format” in “System” of the OTHERS menu When playing: Playback clip video format	**Output format**	
	Setting of “SDI/HDMI/i.LINK I/O Select” of the VIDEO SET menu	
	HD HDMI & HDV SD HDMI i & HDV SD HDMI P & HDV	SD HDMI i & DVCAM
HQ 1920×1080/59.94i HQ 1440×1080/59.94i	No signal	SD/59.94i
HQ 1920×1080/29.97P HQ 1440×1080/29.97P		SD/29.97PsF
HQ 1920×1080/23.98P HQ 1440×1080/23.98P		No signal
SP 1440×1080/59.94i	1440×1080/59.94i	SD/59.94i
SP 1440×1080/23.98P	1440×1080/59.94i 1)	SD/59.94i 1)
HQ 1280×720/59.94P	No signal	SD/59.94i 2)
HQ 1280×720/29.97P		SD/29.97PsF
HQ 1280×720/23.98P		No signal
DVCAM59.94i SQ/EC		SD/59.94i
DVCAM29.97P SQ/EC		SD/29.97PsF
HQ 1920×1080/50i HQ 1440×1080/50i	No signal	SD/50i
HQ 1920×1080/25P HQ 1440×1080/25P		SD/25PsF
SP 1440×1080/50i	1440×1080/50i	SD/50i
HQ 1280×720/50P	No signal	SD/50i 3)
HQ 1280×720/25P		SD/25PsF
DVCAM50i SQ/EC		SD/50i
DVCAM25P SQ/EC		SD/25PsF

1) 59.94i provided through 2-3 pulldown of 23.98P.
2) 59.94i provided through conversion from 59.94P.
3) 50i provided through conversion from 50P.

Limitations of Inputs/Outputs

The outputs from the camcorder are limited by the menu settings as follows:

×: no signal

Menu setting			Output					Input
System		SDI/HDMI/ i.LINK I/O Select	SDI OUT	HDMI OUT	i.LINK	VIDEO OUT	A/V OUT	i.LINK
F.Sys.	HD/SD							
UDF	HD	HD SDI & HD HDMI	HD	HD	×	HD-Y	×	×
		SD SDI & SD HDMI i	SD	SD	×	Composite	Composite	×
		SD HDMI P	×	SD-P	×	×	×	×
		Off	×	×	×	Composite	Composite	×
exFAT	HD	3G SDI & HD HDMI	3G 1) HD	HD	×	HD-Y 2)	×	×
		HD SDI & HD HDMI	HD	HD	×	HD-Y 2)	×	×
		SD SDI & SD HDMI i	SD	SD	×	Composite 2)	Composite 2)	×
		SD HDMI P	×	SD-P	×	×	×	×
		Off	×	×	×	Composite 2)	Composite 2)	×
FAT	HD/HQ	HD SDI & HD HDMI	HD	HD	×	HD-Y	×	×
		SD SDI & SD HDMI i	SD	SD	×	Composite	Composite	×
		SD HDMI i & DVCAM	×	SD	DVCAM	Composite	Composite	DVCAM
		SD HDMI P	×	SD-P	×	×	×	×
		Off	×	×	×	Composite	Composite	×
	HD/SP	HD SDI & HD HDMI	HD	HD	×	HD-Y	×	×
		SD SDI & SD HDMI i	SD	SD	×	Composite	Composite	×
		HD HDMI & HDV	×	HD	HDV	HD-Y	×	HDV
		SD HDMI i & HDV	×	SD	HDV	Composite	Composite	HDV
		SD HDMI P & HDV	×	SD-P	HDV	×	×	HDV
		SD HDMI i & DVCAM	×	SD	DVCAM	Composite	Composite	DVCAM
		Off	×	×	×	Composite	Composite	×
UDF/exFAT	SD	SD SDI & SD HDMI i	SD	SD	×	Composite	Composite	×
		Off	×	×	×	Composite	Composite	×
FAT		SD SDI & SD HDMI i	SD	SD	×	Composite	Composite	×
		SD HDMI i & DVCAM	×	SD	DVCAM	Composite	Composite	DVCAM
		Off	×	×	×	Composite	Composite	×

1) When "Format" in "System" and the format of the played clip are 1920×1080/59.94P, 50P.
2) "×" (no signal) when "Format" in "System" is set to 1920×1080/59.94P, 50P.

Video Format and the Recording Function

The compatible recording functions for each video format are listed as below.

When “Country” is set to “NTSC Area/NTSC(J) Area”

(○: compatible, –: not compatible).

System				Normal Recording	Interval Recording		Frame Recording		Clip Continuous Recording	Picture Cache Recording	Slow & Quick Motion	Proxy Recording
HD/SD	F.Sys.	Format			SDI/HDMI/i.LINK I/O Select		SDI/HDMI/i.LINK I/O Select					
					Other than the right	HDV or DVCAM	Other than the right	HDV or DVCAM				
HD	UDF	HD422 50/1080/59.94i HQ 1920×1080/59.94i HQ 1440×1080/59.94i	MXF	○	○	–	○	–	○	○	–	○
		HD422 50/1080/29.97P, 23.98P HQ 1920×1080/29.97P, 23.98P HD422 50/720/59.94P HQ 1280×720/59.94P		○	○	–	○	–	○	○	○	○
		HQ 1440×1080/29.97P, 23.98P		○	○	–	○	–	○	○	–	○
		HD422 50/720/29.97P, 23.98P		○	○	–	○	–	○	○	○	–
		HQ 1280×720/23.98P		○	–	–	–	–	○	○	–	–
	exFAT	XAVC-L50, L35 1080/59.94P	MXF	○	○	–	○	–	○	○	–	–
		XAVC-I 1080/59.94i		○	○	–	○	–	○	○[1)]	–	○
		XAVC-L50, L35, L25 1080/59.94i		○	○	–	○	–	○	○	–	○
		XAVC-I 1080/29.97P, 23.98P XAVC-I 720/59.94P		○	○	–	○	–	○	○[1)]	○	○
		XAVC-L50, L35 1080/29.97P XAVC-L50, L35 1080/23.98P XAVC-L50 720/59.94P		○	○	–	○	–	○	○	○	○
		HD422 50/1080/59.94i HQ 1920×1080/59.94i HQ 1440×1080/59.94i		○	○	–	○	–	○	○	–	○

System				Normal Recording	Interval Recording		Frame Recording		Clip Continuous Recording	Picture Cache Recording	Slow & Quick Motion	Proxy Recording
HD/SD	F.Sys.	Format			SDI/HDMI/ i.LINK I/O Select		SDI/HDMI/ i.LINK I/O Select					
					Other than the right	HDV or DVCAM	Other than the right	HDV or DVCAM				
HD	exFAT	HD422 50/1080/ 29.97P, 23.98P HQ 1920×1080/ 29.97P, 23.98P HD422 50/720/ 59.94P HQ 1280×720/ 59.94P	MXF	○	○	–	○	–	○	○	○	○
		HQ 1440×1080/ 29.97P, 23.98P		○	○	–	○	–	○	○	–	○
		HD422 50/720/ 29.97P, 23.98P		○	○	–	○	–	○	○	○	–
		HQ 1280×720/ 23.98P		○	–	–	–	–	○	○	–	–
	FAT	HQ 1920×1080/ 59.94i HQ 1440×1080/ 59.94i, 29.97P SP 1440×1080/ 59.94i	MP4	○	○	–	○	–	–	○	–	○
		HQ 1920×1080/ 29.97P HQ 1280×720/ 59.94P		○	○	–	○	–	–	○	○	○
		HQ 1920×1080/ 23.98P		○	○	○	○	○	–	○	○	○
		HQ 1440×1080/ 23.98P		○	○	○	○	○	–	○	–	○
		SP 1440×1080/ 23.98P		○	–	–	–	–	–	○	–	–
		HQ 1280×720/ 29.97P		○	○	–	○	–	–	○	○	–
		HQ 1280×720/ 23.98P		○	○	○	○	○	–	○	○	–
SD	UDF	IMX50 59.94i, 29.97P DVCAM 59.94i, 29.97P	MXF	○	○	–	○	–	○	○	–	–
	exFAT	DVCAM 59.94i, 29.97P		○	○	–	○	–	○	○	–	–
	FAT	DVCAM 59.94i, 29.97P	AVI	○	○	–	○	–	–	○	–	–

1) When XAVC-I is selected for “Format” in “System” of the OTHERS menu, the maximum picture cache time is 4 seconds.

When "Country" is set to "PAL Area"

(○: compatible, –: not compatible).

System				Normal Recording	Interval Recording		Frame Recording		Clip Continuous Recording	Picture Cache Recording	Slow & Quick Motion	Proxy Recording
HD/SD	F.Sys.	Format			SDI/HDMI/i.LINK I/O Select		SDI/HDMI/i.LINK I/O Select					
					Other than the right	HDV or DVCAM	Other than the right	HDV or DVCAM				
HD	UDF	HD422 50/1080/50i HQ 1920×1080/50i HQ 1440×1080/50i	MXF	○	○	–	○	–	○	○	–	○
		HD422 50/1080/25P HQ 1920×1080/25P HD422 50/720/50P HQ 1280×720/50P		○	○	–	○	–	○	○	○	○
		HQ 1440×1080/25P		○	○	–	○	–	○	○	–	○
		HD422 50/720/25P		○	○	–	○	–	○	○	○	–
	exFAT	XAVC-L50, L35 1080/50P	MXF	○	○	–	○	–	○	○	–	–
		XAVC-I 1080/50i		○	○	–	○	–	○	○[1)]	–	○
		XAVC-L50, L35, L25 1080/50i		○	○	–	○	–	○	○	–	○
		XAVC-I 1080/25P XAVC-I 720/50P		○	○	–	○	–	○	○[1)]	○	○
		XAVC-L50, L35 1080/25P XAVC-L50 720/50P		○	○	–	○	–	○	○	○	○
		HD422 50/1080/50i HQ 1920×1080/50i HQ 1440×1080/50i		○	○	–	○	–	○	○	–	○
		HD422 50/1080/25P HQ 1920×1080/25P HD422 50/720/50P HQ 1280×720/50P		○	○	–	○	–	○	○	○	○
		HQ 1440×1080/25P		○	○	–	○	–	○	○	–	○

System				Normal Recording	Interval Recording		Frame Recording		Clip Continuous Recording	Picture Cache Recording	Slow & Quick Motion	Proxy Recording
HD/SD	F.Sys.	Format			SDI/HDMI/ i.LINK I/O Select		SDI/HDMI/ i.LINK I/O Select					
					Other than the right	HDV or DVCAM	Other than the right	HDV or DVCAM				
HD	exFAT	HD422 50/720/25P	MXF	○	○	–	○	–	○	○	○	–
	FAT	HQ 1920×1080/50i HQ 1440×1080/50i SP 1440×1080/50i	MP4	○	○	–	○	–	–	○	–	○
		HQ 1920×1080/25P HQ 1280×720/50P		○	○	–	○	–	–	○	○	○
		HQ 1440×1080/25P		○	○	–	○	–	–	○	–	○
		HQ 1280×720/25P		○	○	–	○	–	–	○	○	–
SD	UDF	IMX50 50i, 25P DVCAM 50i, 25P	MXF	○	○	–	○	–	○	○	–	–
	exFAT	DVCAM 50i, 25P		○	○	–	○	–	○	○	–	–
	FAT	DVCAM 50i, 25P	AVI	○	○	–	○	–	–	○	–	–

1) When XAVC-I is selected for “Format” in “System” of the OTHERS menu, the maximum picture cache time is 4 seconds.

Backup Battery Replacement

This camcorder uses a backup battery to retain various setting data.
A lithium battery (CR2032) for backup is mounted in the camcorder at the factory.
The backup battery retains the date, time, and timecode in Free Run mode even when no operating power is being supplied.

Service life of the backup battery

When the backup battery's voltage falls, the backup battery low-voltage warning appears on the LCD monitor/EVF screen.
If this warning appears, replace the battery as soon as possible.

WARNING

- Battery may explode if mistreated. Do not recharge, disassemble, or dispose of in fire.
- Batteries shall not be exposed to excessive heat such as sunshine, fire or the like.

CAUTION

Danger of explosion if battery is incorrectly replaced. Replace only with the same or equivalent type recommended by the manufacturer.
When you dispose of the battery, you must obey the law in the relative area or country.

Replacing the backup battery

Notes

- Be sure to set the power switch to OFF when replacing the backup battery.
- Be careful not to drop the removed screw into the camcorder.

1 Remove the screw of the backup battery holder *(page 12)*, then remove the cover. Insert a nonmetalic item, such as a plastic toothpick, to the side of the battery and lever the battery out of its compartment.

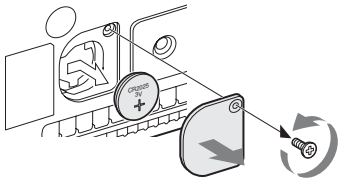

2 Insert a new backup battery (CR2032) with the + symbol on the battery facing outside.

3 Attach the cover in the original position.

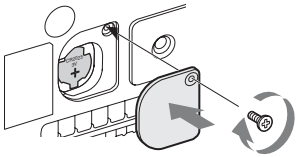

Troubleshooting

Power

Symptoms	Cause	Remedy
The camcorder does not power on when you set the power switch to ON.	No battery pack is mounted and no power is supplied to the DC IN connector.	Mount a battery pack *(page 16)* or connect to AC power using the BC-U1 or BC-U2 *(page 17)*.
	The battery pack is completely exhausted.	Replace the battery pack with a fully charged one *(page 16)*.
The power supply cuts while operating.	The battery pack becomes exhausted.	Replace the battery pack with a fully charged one *(page 16)*.
The battery pack becomes exhausted very quickly.	The ambient temperature is very low.	This owes to the battery characteristics and is not a defect.
	The battery pack is inadequately charged.	Recharge the battery pack *(page 16)*. If the battery pack is soon exhausted even after you charged it fully, it may comes to the end of its life. Replace it with a new one.

Recording/Playback

Symptoms	Cause	Remedy
Recording does not start when you press the REC START/STOP button.	The power switch is set to OFF.	Set the power switch to ON.
	The SxS memory card is write-protected.	Release the write-protection, or replace the card with a non-protected SxS memory card.
	The SxS memory card is full.	Replace the card with one having sufficient space.
	The SxS memory card needs restoration.	Restore the memory card *(page 22)*.
Playback does not start when you press the PLAY button.	The power switch is set to OFF.	Set the power switch to ON.
The supplied IR Remote Commander does not work.	Remote control operation is disabled.	Enable remote control operation *(page 19)*.
	The battery of the IR Remote Commander is exhausted.	Replace the battery with a new one.
Audio recording is not possible.	The AUDIO LEVEL CH-1/CH-2 knobs are set to the minimum level.	Adjust the audio recording levels with the AUDIO LEVEL CH-1/CH-2 knobs *(page 35)*.
The recorded sound is distorted.	The audio level is too high.	Adjust the audio recording levels with the AUDIO LEVEL CH-1/CH-2 knobs *(page 35)*, and record again.
The recorded sound has a high noise level.	The audio level is too low.	Adjust the audio recording levels with the AUDIO LEVEL CH-1/CH-2 knobs *(page 35)*, and record again.

External Devices

Symptoms	Cause	Remedy
The equipment connected to the camcorder via an i.LINK connection does not react as expected, for example, no picture appears on its screen.	It sometimes takes time for the connected equipment to recognize the operation.	Wait for about 15 seconds. If the connected equipment still does not react, do the following: • Check the i.LINK cable, for example, by re-plugging it. • Turn the power off, and connect the cable again. • Change the i.LINK cable.

When Making a Wireless LAN Connection

Note

Obstructions and electromagnetic interference between the camcorder and wireless LAN access point or terminal device, or the ambient environment (such as wall materials) could shorten the communication range or prevent connections altogether. If you experience these problems, check the connection/communication status after moving the camcorder to a new location, or bringing the camcorder and access point/terminal device closer together.

Symptoms	Remedy
The terminal device cannot access to the camcorder.	• Check the connection settings of the terminal device such as the IP address setting, etc. • The communication setting between the access point and client may be invalid. For details, refer to the operating instructions of the access point.
You cannot log in to the camcorder.	Check the user name and password that you set.
The Web menu does not appear.	• Check the IP address setting. • Check that the port number (:8080) is added to the IP address.
The file uploading fails.	The user name and password of the server may not be correct. Input the correct user name and password.

Error/Warning Indications

The camcorder informs you of situations where warning, caution, or an operation check is required, through messages on the LCD monitor/EVF screen, the tally lamps, and a buzzer.
The buzzer is output to the built-in speaker or to the headphones connected via the headphone connector.
The buzzer volume can be set with "Alarm Level" in "Audio Output" *(page 92)* of the AUDIO SET menu.

Error Indications

The camcorder stops operation after the following indications.

Error indication on LCD/EVF	Buzzer	Tally lamps	Cause and measures
E + Error code	Continuous	Rapidly flashing	The camcorder may be defective. Recording stops even if ●REC is displayed on the LCD monitor/EVF screen. Turn off the power and check the connected equipment, cables, and media. If they are not defective, turn on the power again. If the error persists, consult Sony service personnel. (If power cannot be turned off by setting the power switch to OFF, remove both the battery pack or the DC IN source.)

Warning Indications

When one of the following indications is generated, follow the message to clear the problem.

Warning indication on LCD/EVF	Buzzer	Tally lamps	Cause and measures
Media Near Full	Intermittent	Flashing	Free space on the SxS memory card has become insufficient. Replace it with another at the earliest opportunity.
Media Full	Continuous	Rapidly flashing	No space is left on the SxS memory card. Recording, clip copying and clip division cannot be performed. Replace it with another.
SD Card Full	Continuous	Rapidly flashing	No space is left on the SD card. Recording cannot be performed. Replace it with another.
Battery Near End	Intermittent	Flashing	The battery power will be exhausted soon. Charge the battery pack at the earliest opportunity.
Battery End	Continuous	Rapidly flashing	The battery pack is exhausted. Recording cannot be performed. Stop operation and change the battery pack.
Temperature High	Intermittent	Flashing	The internal temperature has risen above a safe operation limit. Suspend operation, turn off the power, and wait until the temperature falls.
Voltage Low	Intermittent	Flashing	The DC IN voltage has become low (stage 1). Check the power supply.
Insufficient Voltage	Continuous	Rapidly flashing	The DC IN voltage is too low (stage 2). Recording cannot be performed. Connect other power source.
HDD A[1)] Battery Near End	Intermittent	Flashing	The battery power of the connected HDD will be exhausted soon. Change the battery at the earliest opportunity.

Warning indication on LCD/EVF	Buzzer	Tally lamps	Cause and measures
HDD A[1] Battery End	Continuous	Rapidly flashing	The battery of the connected HDD is exhausted. Recording cannot be performed. Stop operation to change the battery.
Battery Error Please Change Battery			An error was detected with the battery pack. Replace the battery pack with a normal one.
Backup Battery End Please Change			The remaining power of the backup battery is insufficient. Replace the battery with a new one.
Unknown Media(A)[2] Please Change			A partitioned memory card or one that contains recorded clips exceeding the number permitted with this camcorder is loaded. This card cannot be used with this camcorder. Remove it and load a compatible card.
Media Error Media(A)[2] Needs to be Restored			An error occurred with the memory card. The card requires restoration. Remove the card, load it again, and restore it.
Media Error Cannot Record to Media(A)[2]			Recording cannot be done, as the memory card is defective. As playback may be possible, it is recommended to replace it with another card after copying the clips, as required.
Media Error Cannot Use Media(A)[2]			Neither recording nor playback can be done, as the memory card is defective. It cannot be operated with this camcorder. Replace it with another card.
Will Switch Slots Soon			This is an advanced notice that the camcorder will switch from the current memory card to the other memory card for continuous recording.
No Clip			There are no clips in the memory card. Check the selected card.
Cannot Use Media(A)[2] Unsupported File System			A card of a different file system or an unformatted card was inserted. It cannot be used with this camcorder. Replace it with another card or format it with this camcorder.
In This File system Cannot Use Media(A)[2]			A memory card incompatible with this file system is inserted. Replace the card from the respective slot, format it with the camcorder, or change the “F.Sys.” setting.
Same File Already Exists Change Media(A)[2]			A clip with the same name exists in the memory card to which you want to copy. Replace the card from the respective slot with a different card.
Video Format Mismatch			The external signal input via the i.LINK connection cannot be recorded, as the “Format” setting is different from the signal format of the external input signal. Change “Format” in “System” of the OTHERS menu to match it to that of the external signal.
Copy Protected Input Cannot Record			The external signal input via the i.LINK connection cannot be recorded, as the stream is copy-protected. Check the input signal.
Media Error Playback Halted			An error occurred in reading data from the memory card, and playback cannot be continued. If this frequently occurs, change the memory card after copying the clips, as required.
Media(A)[2] Error			Recording cannot be done, as an error occurred with the memory card. If this frequently occurs, change the memory card.

Warning indication on LCD/EVF	Buzzer	Tally lamps	Cause and measures
Media Reached Rewriting Limit Change Media (A)[2]			The memory card comes to the end of its service life. Make a backup copy and replace the card with another one as soon as possible. Recording/playback may not be performed properly if you continue to use the card. *For details, refer to the operating instructions of the memory card.*
Reached Clip Number Limit Copy Completed to xx/xx			The maximum number of clips for 1 memory card is reached, so copying cannot continue. (xx/xx indicates the completed copy operations.) Replace the card.
Not Enough Capacity Copy Completed to xx/xx			There is not enough capacity for copying. (xx/xx indicates the completed copy operations.) Replace the card.
Reached Duplication Limit Copy Completed to xx/xx			There are already 10 or more clips with the same name as the clip that you want to copy, so copying cannot continue. (xx/xx indicates the completed copy operations.) Replace the card.
Copy Error! (CANCEL:Abort) No Media!			There is no memory card inserted in the slot. Insert a card.
Copy Error! (CANCEL:Abort) Media Write Protected			The memory card is write-protected. Remove the card from the slot and remove the write-protection.
Copy Error! (CANCEL:Abort) Cannot Use Media(A)[2]			A memory card that cannot be used with the camcorder is inserted. Replace the card in the respective slot.
Copy General Files NG: Cannot Copy			Copying of a general file failed. Retry copying.
Unsupported File System			A memory card with an different file system is inserted. Replace the card, format it with the camcorder, or change the “F.Sys.” setting.
Cannot Record to SD Card NG: Media Write Protected			The SD card is write-protected. Remove the card from the slot and remove the write-protection.
Cannot Record to SD Card Reached Clip Number Limit			The maximum number of clips for 1 SD card is reached, so copying cannot continue. Replace the card.
Cannot Record to SD Card NG: Preparing			The proxy recording function is being prepared. Wait a while.

1) B for a HDD connected to slot B
2) (B) for the card in slot B

Licenses

MPEG-4 AVC Patent Portfolio License

THIS PRODUCT IS LICENSED UNDER THE AVC PATENT PORTFOLIO LICENSE FOR THE PERSONAL AND NON-COMMERCIAL USE OF A CONSUMER TO
(i) ENCODE VIDEO IN COMPLIANCE WITH THE AVC STANDARD (“AVC VIDEO”) AND/OR
(ii) DECODE AVC VIDEO THAT WAS ENCODED BY A CONSUMER ENGAGED IN A PERSONAL AND NON-COMMERCIAL ACTIVITY AND/OR WAS OBTAINED FROM A VIDEO PROVIDER LICENSED TO PROVIDE AVC VIDEO.
NO LICENSE IS GRANTED OR SHALL BE IMPLIED FOR ANY OTHER USE.
ADDITIONAL INFORMATION MAY BE OBTAINED FROM MPEG LA, L.L.C.
SEE <HTTP://WWW.MPEGLA.COM>

MPEG-2 Video Patent Portfolio License

ANY USE OF THIS PRODUCT OTHER THAN CONSUMER PERSONAL USE IN ANY MANNER THAT COMPLIES WITH THE MPEG-2 STANDARD FOR ENCODING VIDEO INFORMATION FOR PACKAGED MEDIA IS EXPRESSLY PROHIBITED WITHOUT A LICENSE UNDER APPLICABLE PATENTS IN THE MPEG-2 PATENT PORTFOLIO, WHICH LICENSE IS AVAILABLE FROM MPEG LA, L.L.C., 250 STEELE STREET, SUITE 300, DENVER, COLORADO 80206.
“PACKAGED MEDIA” means any storage media storing MPEG-2 video information such as DVD movie which are sold/distributed to general consumers. Disc replicators or sellers of the PACKAGED MEDIA need to obtain licenses for their own business from MPEG LA. Please contact MPEG LA for any further information.
MPEG LA. L.L.C., 250 STEELE STREET, SUITE 300, DENVER, COLORADO 80206
http://www.mpegla.com

Bitmap Fonts

This product uses RICOH Bitmap Fonts produced and sold by Ricoh Company, Ltd.

END USER LICENSE AGREEMENT

IMPORTANT:
BEFORE USING THE SOFTWARE CONTAINED IN THE CAMCORDER, PLEASE READ THIS END USER LICENSE AGREEMENT (“EULA”) CAREFULLY. BY USING THE SOFTWARE YOU ARE ACCEPTING THE TERMS OF THIS EULA. IF YOU DO NOT ACCEPT THE TERMS OF THIS EULA, YOU MAY NOT USE THE SOFTWARE.

This EULA is a legal agreement between you and Sony Corporation (“SONY”). This EULA governs your rights and obligations regarding the software of SONY and/or its third party licensors (including SONY’s affiliates) and their respective affiliates (collectively, the “THIRD-PARTY SUPPLIERS”) contained in the camcorder, together with any updates/upgrades provided by SONY, any printed, on-line or other electronic documentation for such software, and any data files created by operation of such software (collectively, the “SOFTWARE”).

Notwithstanding the foregoing, any software in the SOFTWARE having a separate end user license agreement (including, but not limited to, GNU General Public license and Lesser/Library General Public License) shall be covered by such applicable separate end user license agreement in lieu of the terms of this EULA to the extent required by such separate end user license agreement (“EXCLUDED SOFTWARE”).

SOFTWARE LICENSE
The SOFTWARE is licensed, not sold. The SOFTWARE is protected by copyright and other intellectual property laws and international treaties.

COPYRIGHT
All right and title in and to the SOFTWARE (including, but not limited to, any images,

photographs, animation, video, audio, music, text and "applets" incorporated into the SOFTWARE) is owned by SONY or one or more of the THIRD-PARTY SUPPLIERS.

GRANT OF LICENSE

SONY grants you a limited license to use the SOFTWARE solely in connection with the camcorder and only for your individual use. SONY and the THIRD-PARTY SUPPLIERS expressly reserve all rights, title and interest (including, but not limited to, all intellectual property rights) in and to the SOFTWARE that this EULA does not specifically grant to you.

REQUIREMENTS AND LIMITATIONS

You may not copy, publish, adapt, redistribute, attempt to derive source code, modify, reverse engineer, decompile, or disassemble any of the SOFTWARE, whether in whole or in part, or create any derivative works from or of the SOFTWARE unless such derivative works are intentionally facilitated by the SOFTWARE. You may not modify or tamper with any digital rights management functionality of the SOFTWARE. You may not bypass, modify, defeat or circumvent any of the functions or protections of the SOFTWARE or any mechanisms operatively linked to the SOFTWARE. You may not separate any individual component of the SOFTWARE for use on more than one camcorder unless expressly authorized to do so by SONY. You may not remove, alter, cover or deface any trademarks or notices on the SOFTWARE. You may not share, distribute, rent, lease, sublicense, assign, transfer or sell the SOFTWARE. The software, network services or other products other than SOFTWARE upon which the SOFTWARE'S performance depends might be interrupted or discontinued at the discretion of the suppliers (software suppliers, service suppliers, or SONY). SONY and such suppliers do not warrant that the SOFTWARE, network services, contents or other products will continue to be available, or will operate without interruption or modification.

EXCLUDED SOFTWARE AND OPEN SOURCE COMPONENTS

Notwithstanding the foregoing limited license grant, you acknowledge that the SOFTWARE may include EXCLUDED SOFTWARE. Certain EXCLUDED SOFTWARE may be covered by open source software licenses ("Open Source Components"), which means any software licenses approved as open source licenses by the Open Source Initiative or any substantially similar licenses, including but not limited to any license that, as a condition of distribution of the software licensed under such license, requires that the distributor make the software available in source code format. If and to the extent disclosure is required, please visit www.sony.com/linux or other SONY-designated web site for a list of applicable OPEN SOURCE COMPONENTS included in the SOFTWARE from time to time, and the applicable terms and conditions governing its use. Such terms and conditions may be changed by the applicable third party at any time without liability to you. To the extent required by the licenses covering EXCLUDED SOFTWARE, the terms of such licenses will apply in lieu of the terms of this EULA. To the extent the terms of the licenses applicable to EXCLUDED SOFTWARE prohibit any of the restrictions in this EULA with respect to such EXCLUDED SOFTWARE, such restrictions will not apply to such EXCLUDED SOFTWARE. To the extent the terms of the licenses applicable to Open Source Components require SONY to make an offer to provide source code in connection with the SOFTWARE, such offer is hereby made.

USE OF SOFTWARE WITH COPYRIGHTED MATERIALS

The SOFTWARE may be capable of being used by you to view, store, process and/or use content created by you and/or third parties. Such content may be protected by copyright, other intellectual property laws, and/or agreements. You agree to use the SOFTWARE only in compliance with all such laws and agreements that apply to such content. You acknowledge and agree that SONY may take appropriate measures to protect the copyright of content stored, processed or used by the SOFTWARE. Such measures include, but are not limited to, counting the frequency of your backup and restoration through certain SOFTWARE features, refusal to accept your request to enable restoration of data, and termination of this EULA in the event of your illegitimate use of the SOFTWARE.

CONTENT SERVICE

PLEASE ALSO NOTE THAT THE SOFTWARE MAY BE DESIGNED TO BE USED WITH CONTENT AVAILABLE THROUGH ONE OR MORE CONTENT SERVICES ("CONTENT SERVICE"). USE OF

THE SERVICE AND THAT CONTENT IS SUBJECT TO THE TERMS OF SERVICE OF THAT CONTENT SERVICE. IF YOU DECLINE TO ACCEPT THOSE TERMS, YOUR USE OF THE SOFTWARE WILL BE LIMITED. You acknowledge and agree that certain content and services available through the SOFTWARE may be provided by third parties over which SONY has no control. USE OF THE CONTENT SERVICE REQUIRES AN INTERNET CONNECTION. THE CONTENT SERVICE MAY BE DISCONTINUED AT ANY TIME.

INTERNET CONNECTIVITY AND THIRD PARTY SERVICES

You acknowledge and agree that access to certain SOFTWARE features may require an Internet connection for which you are solely responsible. Further, you are solely responsible for payment of any third party fees associated with your Internet connection, including but not limited to Internet service provider or airtime charges. Operation of the SOFTWARE may be limited or restricted depending on the capabilities, bandwidth or technical limitations of your Internet connection and service. The provision, quality and security of such Internet connectivity are the sole responsibility of the third party providing such service.

EXPORT AND OTHER REGULATIONS

You agree to comply with all applicable export and re-export restrictions and regulations of the area or country in which you reside, and not to transfer, or authorize the transfer, of the SOFTWARE to a prohibited country or otherwise in violation of any such restrictions or regulations.

HIGH RISK ACTIVITIES

The SOFTWARE is not fault-tolerant and is not designed, manufactured or intended for use or resale as on-line control equipment in hazardous environments requiring fail-safe performance, such as in the operation of nuclear facilities, aircraft navigation or communication systems, air traffic control, direct life support machines, or weapons systems, in which the failure of the SOFTWARE could lead to death, personal injury, or severe physical or environmental damage (“HIGH RISK ACTIVITIES”). SONY, each of the THIRD-PARTY SUPPLIERS, and each of their respective affiliates specifically disclaim any express or implied warranty, duty or condition of fitness for HIGH RISK ACTIVITIES.

EXCLUSION OF WARRANTY ON SOFTWARE

You acknowledge and agree that use of the SOFTWARE is at your sole risk and that you are responsible for use of the SOFTWARE. The SOFTWARE is provided “AS IS,” without warranty, duty or condition of any kind.

SONY AND EACH OF THE THIRD-PARTY SUPPLIERS (for purposes of this Section, SONY and each of the THIRD-PARTY SUPPLIERS shall be collectively referred to as “SONY”) EXPRESSLY DISCLAIM ALL WARRANTIES, DUTIES OR CONDITIONS, EXPRESS OR IMPLIED, INCLUDING, BUT NOT LIMITED TO, THE IMPLIED WARRANTIES OF MERCHANTABILITY, NONINFRINGEMENT AND FITNESS FOR A PARTICULAR PURPOSE. SONY DOES NOT WARRANT OR MAKE ANY CONDITIONS OR REPRESENTATIONS (A) THAT THE FUNCTIONS CONTAINED IN ANY OF THE SOFTWARE WILL MEET YOUR REQUIREMENTS OR THAT THEY WILL BE UPDATED, (B) THAT THE OPERATION OF ANY OF THE SOFTWARE WILL BE CORRECT OR ERROR-FREE OR THAT ANY DEFECTS WILL BE CORRECTED, (C) THAT THE SOFTWARE WILL NOT DAMAGE ANY OTHER SOFTWARE, HARDWARE OR DATA, (D) THAT ANY SOFTWARE, NETWORK SERVICES (INCLUDING THE INTERNET) OR PRODUCTS (OTHER THAN THE SOFTWARE) UPON WHICH THE SOFTWARE’S PERFORMANCE DEPENDS WILL CONTINUE TO BE AVAILABLE, UNINTERRUPTED OR UNMODIFIED, AND (E) REGARDING THE USE OR THE RESULTS OF THE USE OF THE SOFTWARE IN TERMS OF ITS CORRECTNESS, ACCURACY, RELIABILITY, OR OTHERWISE.

NO ORAL OR WRITTEN INFORMATION OR ADVICE GIVEN BY SONY OR AN AUTHORIZED REPRESENTATIVE OF SONY SHALL CREATE A WARRANTY, DUTY OR CONDITION OR IN ANY WAY INCREASE THE SCOPE OF THIS WARRANTY. SHOULD THE SOFTWARE PROVE DEFECTIVE YOU

ASSUME THE ENTIRE COST OF ALL NECESSARY SERVICING, REPAIR OR CORRECTION. SOME JURISDICTIONS DO NOT ALLOW THE EXCLUSION OF IMPLIED WARRANTIES, SO THESE EXCLUSIONS MAY NOT APPLY TO YOU.

LIMITATION OF LIABILITY

SONY AND EACH OF THE THIRD-PARTY SUPPLIERS (for purposes of this Section, SONY and each of the THIRD-PARTY SUPPLIERS shall be collectively referred to as "SONY") SHALL NOT BE LIABLE FOR ANY INCIDENTAL OR CONSEQUENTIAL DAMAGES FOR BREACH OF ANY EXPRESS OR IMPLIED WARRANTY, BREACH OF CONTRACT, NEGLIGENCE, STRICT LIABILITY OR UNDER ANY OTHER LEGAL THEORY RELATED TO THE SOFTWARE, INCLUDING, BUT NOT LIMITED TO, ANY DAMAGES ARISING OUT OF LOSS OF PROFITS, LOSS OF REVENUE, LOSS OF DATA, LOSS OF USE OF THE SOFTWARE OR ANY ASSOCIATED HARDWARE, DOWN TIME AND USER'S TIME, EVEN IF ANY OF THEM HAVE BEEN ADVISED OF THE POSSIBILITY OF SUCH DAMAGES. IN ANY CASE, EACH AND ALL OF THEIR AGGREGATE LIABILITY UNDER ANY PROVISION OF THIS EULA SHALL BE LIMITED TO THE AMOUNT ACTUALLY PAID FOR THE PRODUCT. SOME JURISDICTIONS DO NOT ALLOW THE EXCLUSION OR LIMITATION OF INCIDENTAL OR CONSEQUENTIAL DAMAGES, SO THE ABOVE EXCLUSION OR LIMITATION MAY NOT APPLY TO YOU.

CONSENT TO USE OF NON-PERSONAL INFORMATION, LOCATION DATA, DATA SECURITY

You acknowledge and agree that SONY and its affiliates, partners and agents may read, collect, transfer, process and store certain information collected from the SOFTWARE, including but not limited to information about (i) the SOFTWARE and (ii) the software applications, contents and peripheral devices that interact with your camcorder and the SOFTWARE ("Information"). Information includes, but is not limited to: (1) unique identifiers relating to your camcorder and its components; (2) performance of the camcorder, the SOFTWARE and their components; (3) configurations of your camcorder, the SOFTWARE and the software applications, contents and peripheral devices that interact with the camcorder and the SOFTWARE; (4) use and frequency of use of the functions of (x) the SOFTWARE, and (y) the software applications, contents and peripheral devices that interact with the SOFTWARE; and (5) location data, as indicated below. SONY and its affiliates, partners and agents may use and disclose Information subject to applicable laws in order to improve its products and services or to provide products or services to you. Such uses include, but are not limited to: (a) administering the functionalities of the SOFTWARE; (b) to improve, service, update or upgrade the SOFTWARE; (c) improving, developing and enhancing the current and future products and services of SONY and other parties; (d) to provide you with information about the products and services offered by SONY and other parties; (e) complying with applicable laws or regulations; and (f) to the extent offered, providing you with location-based services of SONY and other parties, as indicated below. In addition, SONY retains the right to use Information to protect itself and third parties from illegal, criminal or harmful conduct.

Certain services available through the SOFTWARE may rely upon location information, including, but not limited to, the geographic location of the camcorder. You acknowledge that for the purpose of providing such services, SONY, the THIRD-PARTY SUPPLIERS or their partners may collect, archive, process and use such location data, and that such services are governed by the privacy policies of SONY or such third party. By using any such services, you agree that you have reviewed the privacy policies applicable to such services and consent to such activities.

SONY, its affiliates, partners and agents will not intentionally use Information to personally identify the owner or user of the SOFTWARE without your knowledge or consent. Any use of Information will be in accordance with the privacy policies of SONY or such third party. Please contact applicable contact address of each area or country for SONY's current privacy policy.

Please contact applicable third parties for privacy policies relating to personally identifiable and other information you provide when you use or access third party software or services.

Information may be processed, stored or transferred to SONY, its affiliates or agents which are located in countries outside of your country of residence. Data protection and information privacy laws in certain countries may not offer the same level of protection as your country of residence and you may have fewer legal rights in relation to Information processed and stored in, or transferred to, such countries. SONY will use reasonable efforts to take appropriate technical and organizational steps to prevent unauthorized access to or disclosure of Information, but does not warrant it will eliminate all risk of misuse of such Information.

AUTOMATIC UPDATE FEATURE

From time to time, SONY or the THIRD-PARTY SUPPLIERS may automatically update or otherwise modify the SOFTWARE, including, but not limited to, for purposes of enhancement of security functions, error correction and improvement of functions, at such time as you interact with SONY's or third parties' servers, or otherwise. Such updates or modifications may delete or change the nature of features or other aspects of the SOFTWARE, including, but not limited to, functions you may rely upon. You acknowledge and agree that such activities may occur at SONY's sole discretion and that SONY may condition continued use of the SOFTWARE upon your complete installation or acceptance of such update or modifications. Any updates/modifications shall be deemed to be, and shall constitute part of, the SOFTWARE for purposes of this EULA. By acceptance of this EULA, you consent to such update/modification.

ENTIRE AGREEMENT, WAIVER, SEVERABILITY

This EULA and SONY's privacy policy, each as amended and modified from time to time, together constitute the entire agreement between you and SONY with respect to the SOFTWARE. The failure of SONY to exercise or enforce any right or provision of this EULA shall not constitute a waiver of such right or provision. If any part of this EULA is held invalid, illegal, or unenforceable, that provision shall be enforced to the maximum extent permissible so as to maintain the intent of this EULA, and the other parts will remain in full force and effect.

GOVERNING LAW AND JURISDICTION

The United Nations Convention on Contracts for the International Sale of Goods shall not apply to this EULA. This EULA shall be governed by the laws of Japan, without regards to conflict of laws provisions. Any dispute arising out of this EULA shall be subject to the exclusive venue of the Tokyo District Court in Japan, and the parties hereby consent to the venue and jurisdiction of such courts.

EQUITABLE REMEDIES

Notwithstanding anything contained in this EULA to the contrary, you acknowledge and agree that any violation of or non-compliance with this EULA by you will cause irreparable harm to SONY, for which monetary damages would be inadequate, and you consent to SONY obtaining any injunctive or equitable relief that SONY deems necessary or appropriate in such circumstances. SONY may also take any legal and technical remedies to prevent violation of and/or to enforce this EULA, including, but not limited to, immediate termination of your use of the SOFTWARE, if SONY believes in its sole discretion that you are violating or intend to violate this EULA. These remedies are in addition to any other remedies SONY may have at law, in equity or under contract.

TERMINATION

Without prejudice to any of its other rights, SONY may terminate this EULA if you fail to comply with any of its terms. In case of such termination, you must: (i) cease all use, and destroy any copies, of the SOFTWARE; (ii) comply with the requirements in the section below entitled "Your Account Responsibilities".

AMENDMENT

SONY RESERVES THE RIGHT TO AMEND ANY OF THE TERMS OF THIS EULA AT ITS SOLE DISCRETION BY POSTING NOTICE ON A SONY DESIGNATED WEB SITE, BY EMAIL NOTIFICATION TO AN EMAIL ADDRESS PROVIDED BY YOU, BY PROVIDING NOTICE AS PART OF THE PROCESS IN WHICH YOU OBTAIN UPGRADES/UPDATES OR BY ANY OTHER LEGALLY RECOGNIZABLE FORM OF NOTICE. If you do not agree to the amendment, you should promptly contact SONY for

instructions. Your continued use of the SOFTWARE after the effective date of any such notice shall be deemed your agreement to be bound by such amendment.

THIRD-PARTY BENEFICIARIES

Each THIRD-PARTY SUPPLIER is an express intended third-party beneficiary of, and shall have the right to enforce, each provision of this EULA with respect to the SOFTWARE of such party.

Should you have any questions concerning this EULA, you may contact SONY by writing to SONY at applicable contact address of each area or country.

Copyright © 2012 Sony Corporation.

About OpenSSL

Because it uses the OpenSSL Toolkit, this product uses software developed by the OpenSSL Project (http://www.openssl.org/).

OpenSSL License

```
/*
==========================
=======
*    Copyright (c) 1998-2008 The OpenSSL
*    Project. All rights reserved.
*
*    Redistribution and use in source and
*    binary forms, with or without
*    modification, are permitted provided
*    that the following conditions are met:
*
*    1. Redistributions of source code must
*       retain the above copyright notice,
*       this list of conditions and the
*       following disclaimer.
*
*    2. Redistributions in binary form must
*       reproduce the above copyright
*       notice, this list of conditions and the
*       following disclaimer in the
*       documentation and/or other
*       materials provided with the
*       distribution.
*
*    3. All advertising materials mentioning
*       features or use of this software must
*       display the following
*       acknowledgment:
*       "This product includes software
*       developed by the OpenSSL Project
*       for use in the OpenSSL Toolkit.
*       (http://www.openssl.org/)"
*
*    4. The names "OpenSSL Toolkit" and
*       "OpenSSL Project" must not be used
*       to endorse or promote products
*       derived from this software without
*       prior written permission. For written
*       permission, please contact openssl-
*       core@openssl.org.
*
*    5. Products derived from this software
*       may not be called "OpenSSL" nor
*       may "OpenSSL" appear in their
*       names without prior written
*       permission of the OpenSSL Project.
*
*    6. Redistributions of any form
*       whatsoever must retain the following
*       acknowledgment:
*       "This product includes software
*       developed by the OpenSSL Project
*       for use in the OpenSSL Toolkit
*       (http://www.openssl.org/)"
*
*    THIS SOFTWARE IS PROVIDED BY
*    THE OpenSSL PROJECT ``AS IS''
*    AND ANY EXPRESSED OR IMPLIED
*    WARRANTIES, INCLUDING, BUT NOT
*    LIMITED TO, THE IMPLIED
*    WARRANTIES OF MERCHANTABILITY
*    AND FITNESS FOR A PARTICULAR
*    PURPOSE ARE DISCLAIMED. IN NO
*    EVENT SHALL THE OpenSSL
*    PROJECT OR ITS CONTRIBUTORS BE
*    LIABLE FOR ANY DIRECT, INDIRECT,
*    INCIDENTAL, SPECIAL, EXEMPLARY,
*    OR CONSEQUENTIAL DAMAGES
*    (INCLUDING, BUT NOT LIMITED TO,
*    PROCUREMENT OF SUBSTITUTE
*    GOODS OR SERVICES;
*    LOSS OF USE, DATA, OR PROFITS;
*    OR BUSINESS INTERRUPTION)
*    HOWEVER CAUSED AND ON ANY
*    THEORY OF LIABILITY, WHETHER IN
*    CONTRACT, STRICT LIABILITY, OR
*    TORT (INCLUDING NEGLIGENCE OR
```

```
*    OTHERWISE)
*    ARISING IN ANY WAY OUT OF THE
*    USE OF THIS SOFTWARE, EVEN IF
*    ADVISED OF THE POSSIBILITY OF
*    SUCH DAMAGE.
*

=============================
=======
*
*    This product includes cryptographic
*    software written by Eric Young
*    (eay@cryptsoft.com). This product
*    includes software written by Tim
*    Hudson (tjh@cryptsoft.com).
*
*    /
```

Original SSLeay License

```
*    Copyright (C) 1995-1998 Eric Young
*    (eay@cryptsoft.com)
*    All rights reserved.
*
*    This package is an SSL
*    implementation written by Eric Young
*    (eay@cryptsoft.com).
*    The implementation was written so as
*    to conform with Netscapes SSL.
*
*    This library is free for commercial and
*    non-commercial use as long as the
*    following conditions are aheared to.
*    The following conditions apply to all
*    code found in this distribution, be it the
*    RC4, RSA, lhash, DES, etc., code; not
*    just the SSL code. The SSL
*    documentation included with this
*    distribution is covered by the same
*    copyright terms except that the holder
*    is Tim Hudson (tjh@cryptsoft.com).
*
*    Copyright remains Eric Young's, and
*    as such any Copyright notices in the
*    code are not to be removed.
*    If this package is used in a product,
*    Eric Young should be given attribution
*    as the author of the parts of the library
*    used.
*    This can be in the form of a textual
*    message at program startup or in
*    documentation (online or textual)
*    provided with the package.
*
*    Redistribution and use in source and
*    binary forms, with or without
*    modification, are permitted provided
*    that the following conditions are met:
*    1. Redistributions of source code must
*       retain the copyright notice, this list of
*       conditions and the following
*       disclaimer.
*    2. Redistributions in binary form must
*       reproduce the above copyright
*       notice, this list of conditions and the
*       following disclaimer in the
*       documentation and/or other
*       materials provided with the
*       distribution.
*    3. All advertising materials mentioning
*       features or use of this software must
*       display the following
*       acknowledgement:
*       "This product includes
*       cryptographic software written by
*       Eric Young (eay@cryptsoft.com)"
*       The word 'cryptographic' can be left
*       out if the rouines from the library
*       being used are not cryptographic
*       related :-).
*    4. If you include any Windows specific
*       code (or a derivative thereof) from
*       the apps directory (application
*       code) you must include an
*       acknowledgement:
*       "This product includes software
*       written by Tim Hudson
*       (tjh@cryptsoft.com)"
*
*    THIS SOFTWARE IS PROVIDED BY
*    ERIC YOUNG ``AS IS" AND ANY
*    EXPRESS OR IMPLIED WARRANTIES,
*    INCLUDING, BUT NOT LIMITED TO,
*    THE IMPLIED WARRANTIES OF
*    MERCHANTABILITY AND FITNESS
*    FOR A PARTICULAR PURPOSE ARE
*    DISCLAIMED. IN NO EVENT SHALL
*    THE AUTHOR OR CONTRIBUTORS BE
*    LIABLE FOR ANY DIRECT, INDIRECT,
*    INCIDENTAL, SPECIAL, EXEMPLARY,
*    OR CONSEQUENTIAL DAMAGES
*    (INCLUDING, BUT NOT LIMITED TO,
*    PROCUREMENT OF SUBSTITUTE
```

```
*   GOODS OR SERVICES; LOSS OF USE,
*   DATA, OR PROFITS; OR BUSINESS
*   INTERRUPTION)
*   HOWEVER CAUSED AND ON ANY
*   THEORY OF LIABILITY, WHETHER IN
*   CONTRACT, STRICT LIABILITY, OR
*   TORT (INCLUDING NEGLIGENCE OR
*   OTHERWISE) ARISING IN ANY WAY
*   OUT OF THE USE OF THIS SOFTWARE,
*   EVEN IF ADVISED OF THE
*   POSSIBILITY OF SUCH DAMAGE.
*
*   The licence and distribution terms for
*   any publically available version or
*   derivative of this code cannot be
*   changed. i.e. this code cannot simply
*   be copied and put under another
*   distribution licence [including the GNU
*   Public Licence.]
*   /
```

Specifications

General

Mass

Approx. 2.4 kg (5 lb 4.7 oz) (Camcorder only)

Approx. 2.8 kg (6 lb 2.8 oz) (With lens hood (1), eyecup (1), battery pack BP-U30 (1), SxS memory card (1))

Dimensions (W × H × D)

168 mm × 161 mm × 331 mm ($6\ ^{5}/_{8} \times 6\ ^{3}/_{8} \times 13\ ^{1}/_{8}$ inches)
(Not including extruding parts.)

The values for dimensions are approximate.

Power Requirements

DC 12 V (11 V to 17 V)

Power Consumption

Approx. 18 W
(while recording with LCD Off, EVF On, I/O Select Off, and Wireless function Off)

Approx. 23 W
(while recording with LCD On, EVF On, I/O Select HD-SDI, and Wireless function On)

Inrush current

(1) Maximum possible inrush current at initial switch-on (Voltage changes caused by manual switching): 50 A peak, 9.5 A r.m.s. (240V AC)

(2) Inrush current after a mains interruption of five seconds (Voltage changes caused at zero-crossing): 3 A peak, 0.7 A r.m.s. (240V AC)

Operating Temperature

0°C to 40°C (32°F to 104°F)

Storage Temperature

–20°C to +60°C (–4°F to +140°F)

Battery Operation Time

(While recording with LCD Off, EVF On, I/O Select Off, and Wireless function Off)

With battery pack BP-U90: approx. 4.5 hours

With battery pack BP-U60/BP-U60T: approx. 3 hours

With battery pack BP-U30: approx. 1.5 hours

Recording Format (Video)

XAVC Intra

XAVC-I mode: CBG, 112 Mbps max, MPEG-4 H.264/AVC

XAVC Long

XAVC-L 50 mode: VBR, 50 Mbps max, MPEG-4 H.264/AVC

XAVC-L 35 mode: VBR, 35 Mbps max, MPEG-4 H.264/AVC

XAVC-L 25 mode: VBR, 25 Mbps max, MPEG-4 H.264/AVC

MPEG-2 Long GOP

MPEG HD422 mode: CBR, 50 Mbps max, MPEG-2 422P@HL

MPEG HD420 HQ mode: VBR, 35 Mbps max, MPEG-2 MP@HL

MPEG HD420 SP mode: CBR, 25 Mbps max, MPEG-2 MP@H-14

MPEG IMX

IMX50 mode: CBR, 50 Mbps, MPEG-2 422P@ML Intra

DVCAM

DVCAM mode: CBR, 25 Mbps, DVCAM

Recording Format (Audio)

exFAT

XAVC-I mode: LPCM 24-bit, 48-kHz, 4 channels

XAVC-L mode: LPCM 24-bit, 48-kHz, 4 channels

MPEG HD422 mode: LPCM 24-bit, 48-kHz, 4 channels

MPEG HD420 HQ mode: LPCM 16-bit, 48-kHz, 4 channels

DVCAM mode: LPCM 16-bit, 48-kHz, 4 channels

UDF

MPEG HD422 mode: LPCM 24-bit, 48-kHz, 4 channels

MPEG HD420 HQ mode: LPCM 16-bit, 48-kHz, 4 channels

IMX50 mode: LPCM 24/16-bit, 48-kHz, 4 channels

DVCAM mode: LPCM 16-bit, 48-kHz, 4 channels

FAT

MPEG HD420 HQ mode: LPCM 16-bit, 48-kHz, 4 channels

MPEG HD420 SP mode: LPCM 16-bit, 48-kHz, 4 channels

DVCAM mode: LPCM 16-bit, 48-kHz, 2 channels

Recording Frame Rate

exFAT

XAVC-I mode:
1920 × 1080/59.94i, 50i, 29.97P, 23.98P, 25P
1280 × 720/59.94P, 50P

XAVC-L50 mode:
1920 × 1080/59.94P, 50P, 59.94i, 50i, 29.97P, 23.98P, 25P
1280 × 720/59.94P, 50P

XAVC-L35 mode:
1920 × 1080/59.94P, 50P, 59.94i, 50i, 29.97P, 23.98P, 25P

XAVC-L25 mode:
1920 × 1080/59.94i, 50i

MPEG HD422 mode:
1920 × 1080/59.94i, 50i, 29.97P, 23.98P, 25P
1280 × 720/59.94P, 50P, 29.97P, 23.98P, 25P

MPEG HD420 HQ mode:
1920 × 1080/59.94i, 50i, 29.97P, 23.98P, 25P
1440 × 1080/59.94i, 50i, 29.97P, 23.98P, 25P
1280 × 720/59.94P, 50P, 23.98P (2-3 Pull Down)

DVCAM mode:
720 × 480/59.94i, 29.97PsF
720 × 576/50i, 25PsF

UDF
MPEG HD422 mode:
1920 × 1080/59.94i, 50i, 29.97P, 23.98P, 25P
1280 × 720/59.94P, 50P, 29.97P, 23.98P, 25P
MPEG HD420 HQ mode:
1920 × 1080/59.94i, 50i, 29.97P, 23.98P, 25P
1440 × 1080/59.94i, 50i, 29.97P, 23.98P, 25P
1280 × 720/59.94P, 50P, 23.98P (2-3 Pull Down)
MPEG IMX50 mode:
720 × 486/59.94i, 29.97PsF
720 × 576/50i, 25PsF
DVCAM mode:
720 × 480/59.94i, 29.97PsF
720 × 576/50i, 25PsF

FAT
MPEG HD420 HQ mode:
1920 × 1080/59.94i, 50i, 29.97P, 23.98P, 25P
1440 × 1080/59.94i, 50i, 29.97P, 23.98P, 25P
1280 × 720/59.94P, 50P, 29.97P, 23.98P, 25P
MPEG HD420 SP mode:
1440 × 1080/59.94i, 50i, 23.98P (2-3 Pull Down)
DVCAM mode:
720 × 480/59.94i, 29.97PsF
720 × 576/50i, 25PsF

Recording/Playback Time

exFAT
XAVC-I mode
When using SBP-128B (128 GB): Approx. 120 minutes
When using SBP-64B / SBS-64G1A (64 GB): Approx. 60 minutes
When using SBS-32G1A (32 GB): Approx. 30 minutes
XAVC-L50 mode
When using SBP-128B (128 GB): Approx. 240 minutes
When using SBP-64B / SBS-64G1A (64 GB): Approx. 120 minutes
When using SBS-32G1A (32 GB): Approx. 60 minutes
XAVC-L35 mode
When using SBP-128B (128 GB): Approx. 340 minutes
When using SBP-64B / SBS-64G1A (64 GB): Approx. 170 minutes
When using SBS-32G1A (32 GB): Approx. 85 minutes
XAVC-L25 mode
When using SBP-128B (128 GB): Approx. 440 minutes
When using SBP-64B / SBS-64G1A (64 GB): Approx. 220 minutes
When using SBS-32G1A (32 GB): Approx. 110 minutes
MPEG HD422 mode
When using SBP-128B (128 GB): Approx. 240 minutes
When using SBP-64B / SBS-64G1A (64 GB): Approx. 120 minutes
When using SBS-32G1A (32 GB): Approx. 60 minutes
MPEG HD420 HQ mode
When using SBP-128B (128 GB): Approx. 360 minutes
When using SBP-64B / SBS-64G1A (64 GB): Approx. 180 minutes
When using SBS-32G1A (32 GB): Approx. 90 minutes
DVCAM mode
When using SBP-128B (128 GB): Approx. 440 minutes
When using SBP-64B / SBS-64G1A (64 GB): Approx. 220 minutes
When using SBS-32G1A (32 GB): Approx. 110 minutes

UDF
MPEG HD422 mode
When using SBP-128B (128 GB): Approx. 240 minutes

When using SBP-64B / SBS-64G1A (64 GB): Approx. 120 minutes
When using SBS-32G1A (32 GB): Approx. 60 minutes
MPEG HD420 HQ mode
When using SBP-128B (128 GB): Approx. 360 minutes
When using SBP-64B / SBS-64G1A (64 GB): Approx. 180 minutes
When using SBS-32G1A (32 GB): Approx. 90 minutes
MPEG IMX50 mode
When using SBP-128B (128 GB): Approx. 240 minutes
When using SBP-64B / SBS-64G1A (64 GB): Approx. 120 minutes
When using SBS-32G1A (32 GB): Approx. 60 minutes
DVCAM mode
When using SBP-128B (128 GB): Approx. 440 minutes
When using SBP-64B / SBS-64G1A (64 GB): Approx. 220 minutes
When using SBS-32G1A (32 GB): Approx. 110 minutes

FAT
MPEG HD420 HQ mode
When using SBP-128B (128 GB): Approx. 400 minutes
When using SBP-64B / SBS-64G1A (64GB): Approx. 200 minutes
When using SBS-32G1A (32GB): Approx. 100 minutes
MPEG HD420 SP mode
When using SBP-128B (128 GB): Approx. 560 minutes
When using SBP-64B / SBS-64G1A (64GB): Approx. 280 minutes
When using SBS-32G1A (32GB): Approx. 140 minutes
DVCAM mode
When using SBP-128B (128 GB): Approx. 520 minutes
When using SBP-64B / SBS-64G1A (64GB): Approx. 260 minutes
When using SBS-32G1A (32GB): Approx. 130 minutes

Note

These approximate playback times depend on operating conditions, available memory, etc.

Lens

Lens Mount
Fixed type

Zoom Ratio
17× (optical), power/manual switchable

Focal Length
f = 5.6 mm to 95.2 mm
(equivalent to 29.3 mm to 499 mm on a 35 mm lens)

Iris
Auto/manual switchable
F1.9 to F16 and C (close)

Focus
AF/MF/Full MF switchable
800 mm to ∞(macro OFF)
50 mm to ∞(macro ON, wide end)
800 mm to ∞(macro ON, tele end)

Image Stabilizer
ON/OFF possible, shift-lens system

Filter Diameter
M 77 mm, pitch 0.75 mm

Camera Section

Image Device (Type)
1/2-inch triple chip "Exmor" Full HD CMOS image sensor

Effective Picture Elements
1920 (H) × 1080 (V)

Optical System
F1.6 prism system

Built-in Optical Filters
CLEAR: Clear
1: 1/8ND
2: 1/64ND

Sensitivity (2000 lx, 89.9% reflectance)
F12 (typical, 1920 × 1080/59.94i mode)
F13 (typical, 1920 × 1080/50i mode)

Minimum Illumination
0.09 lx (typical, 1920 × 1080/59.94i)
0.07 lx (typical, 1920 × 1080/50i)
(F1.9, +18 dB gain, with 64-frame accumulation, Gamma off, 100% video level)
0.02 lx (typical, 1920 × 1080/59.94i)
0.02 lx (typical, 1920 × 1080/50i)
(F1.9, +18 dB gain, with 64-frame accumulation, Gamma on, 50% video level)

S/N Ratio
58 dB (Y) (typical)

Horizontal Resolution
1,000 TV lines or more (1920 × 1080i mode)

Shutter Speed
1/32 sec. to 1/2,000 sec.

Slow Shutter (SLS)
2, 3, 4, 5, 6, 7, 8, 16, 32, and 64-frame accumulation

Slow & Quick Motion Function

XAVC Intra, XAVC Long
1080P: 1 to 30 and 60 fps in NTSC setting, 1 to 25 and 50 fps in PAL setting
720P: 1 to 60 fps in NTSC setting, 1 to 50 fps in PAL setting

MPEG HD422
1080P: 1 to 30 fps in NTSC setting, 1 to 25 fps in PAL setting
720P: 1 to 60 fps in NTSC setting, 1 to 50 fps in PAL setting

MPEG HD420 HQ
1080P: 1 to 30 fps
720P: 1 to 60 fps

White Balance
Preset mode (3200K), Memory A mode, Memory B mode/ATW mode

Gain
–3, 0, 3, 6, 9, 12, 18 dB, AGC

Gamma Curve
Selectable

Inputs/Outputs

Audio Input
XLR type 3-pin (2), female, LINE/MIC/MIC+48V switchable
LINE: +4 dBu
MIC: –70 dBu to –30 dBu
(Reference level 0 dBu = 0.775 Vrms)

Composite Output
AV multi-connector (1), NTSC or PAL (common with Audio Output)

Video Output
BNC type (1), HD-Y/composite signal, switchable with GENLOCK IN connector
1.0 Vp-p, 75 Ω

Audio Output
AV multi-connector (1),

-10 dBu (Reference level), 47 kΩ (common with Composite Output)

SDI Output

BNC type (1), switchable with 3G/HD/SD

SMPTE 292M/259M/424M/425M standards

i.LINK

IEEE 1394, 4-pin connector (1), HDV (HDV 1080i) / DV input/output, S400

Timecode Input

BNC type (1), switchable with TC OUT connector

0.5 V to 18 Vp-p, 10 kΩ

Timecode Output

BNC type (1), switchable with TC IN connector

1.0 Vp-p, 75 Ω

Genlock Input

BNC type (1), switchable with VIDEO OUT connector

1.0 Vp-p, 75 Ω

USB

USB device, mini-B (1)

Headphone Output

Stereo minijack (1)

–18 dBu (Reference level output under 16 Ωload)

Speaker Output

Monaural, 250 mW

DC input

DC jack (1)

Lens Remote

8-pin round (1)

HDMI Output

Type A (1)

Option

4-pin (Type A) (1)

Monitoring

Viewfinder

0.45-inch color LCD: 852 (H) × 480 (V), 16:9

Built-in LCD Monitor

3.5-inch color LCD monitor: 960 (H) × 3 (RGB) × 540 (V), 16:9

Built-in Microphone

Built-in Microphone

Omnidirectional stereo electret condenser microphone

Media

Type

ExpressCard/34 slot (2)

Supplied Accessories

Lens hood (1)

This is pre-installed to the camcorder.

EVF eyecup (1)

This is pre-installed to the camcorder.

Infrared Remote Commander (1)

USB wireless LAN module IFU-WLM3 (1)

Accessory shoe kit (1)

BP-U30 battery pack (1)

Battery Charger/AC Adaptor: BC-U1 (1)

Power cord (1)

USB cable (1)

AV connecting cable (1)

Shoulder strap (1)

Lithium battery (CR2032 for backup) (1)

This is pre-installed to the camcorder.

Lithium battery (CR2025 for the IR Remote Commander) (1)

This is pre-installed to the IR Remote Commander.

Warranty Booklet (1)

"Before Using this Unit" (1)

CD-ROM "Operating instructions" (1)

Software Downloads

When the unit is used with a PC connection, download any device drivers, plug-ins, and application software you require from the following websites.

Sony Professional products website:

U.S.A.	http://pro.sony.com
Canada	http://www.sonybiz.ca
Latin America	http://sonypro-latin.com
Europe	http://www.pro.sony.eu/pro
Middle East, Africa	http://sony-psmea.com
Russia	http://sony.ru/pro/
Brazil	http://sonypro.com.br
Australia	http://pro.sony.com.au
New Zealand	http://pro.sony.co.nz
Japan	http://www.sonybsc.com
Asia Pacific	http://pro.sony-asia.com
Korea	http://bp.sony.co.kr
China	http://pro.sony.com.cn
India	http://pro.sony.co.in

Sony Creative Software, software download page:
http://www.sonycreativesoftware.com/download/software_for_sony_equipment

Optional Accessories

Battery pack
BP-U30, BP-U60, BP-U60T, BP-U90
Battery charger/AC adaptor
BC-U1, BC-U2
SxS memory card
SxS PRO Series
SxS-1 Series
SxS memory card USB reader/writer
SBAC-US20
Media Adaptor
QDA-EX1 (for XQD memory cards)
MEAD-SD02 (for SDHC cards)
Electret condenser microphone
ECM-VG1, ECM-673, ECM-674, ECM-678, ECM-MS2, ECM-680S
Wireless microphone
UWP-V1*, UWP-V2*
Memory recording unit
HVR-MRC1K*

* To attach accessories to the rear accessory shoe, use the cold shoe kit.

Design and specifications are subject to change without notice.

Notes

- Always make a test recording, and verify that it was recorded successfully.
  SONY WILL NOT BE LIABLE FOR DAMAGES OF ANY KIND INCLUDING, BUT NOT LIMITED TO, COMPENSATION OR REIMBURSEMENT ON ACCOUNT OF FAILURE OF THIS UNIT OR ITS RECORDING MEDIA, EXTERNAL STORAGE SYSTEMS OR ANY OTHER MEDIA OR STORAGE SYSTEMS TO RECORD CONTENT OF ANY TYPE.
- Always verify that the unit is operating properly before use. SONY WILL NOT BE LIABLE FOR DAMAGES OF ANY KIND INCLUDING, BUT NOT LIMITED TO, COMPENSATION OR REIMBURSEMENT ON ACCOUNT OF THE LOSS OF PRESENT OR PROSPECTIVE PROFITS DUE TO FAILURE OF THIS UNIT, EITHER DURING THE WARRANTY PERIOD OR AFTER EXPIRATION OF THE WARRANTY, OR FOR ANY OTHER REASON WHATSOEVER.
- SONY WILL NOT BE LIABLE FOR CLAIMS OF ANY KIND MADE BY USERS OF THIS UNIT OR MADE BY THIRD PARTIES.
- SONY WILL NOT BE LIABLE FOR THE LOSS, REPAIR, OR REPRODUCTION OF ANY DATA RECORDED ON THE INTERNAL STORAGE SYSTEM, RECORDING MEDIA, EXTERNAL STORAGE SYSTEMS OR ANY OTHER MEDIA OR STORAGE SYSTEMS.
- SONY WILL NOT BE LIABLE FOR THE TERMINATION OR DISCONTINUATION OF ANY SERVICES RELATED TO THIS UNIT THAT MAY RESULT DUE TO CIRCUMSTANCES OF ANY KIND.

Index

Numerics

23.98P Output 94
3G SDI OUT Level A/B 94

A

A/V OUT connector 112
AC Adaptor 16
AC Power 17
Accessory shoe 9
Accessory shoe plate 9
AGC mode 30
All Reset 101
All-Clip thumbnail screen 69
Aperture 48
Area Detection 49
assignable buttons 37, 103
ATW 29
ATW Speed 89
Audio Input 91
AUDIO LEVEL knobs 35
audio monitoring 35
Audio Output 92
audio recording levels 35
AUDIO SELECT switches 35
AUDIO SET Menu 91
AUDIO Status 79
Auto FB Adjust 41, 90
Auto Naming 27
Auto Shutter 31
Auto White Balance 30
Auto-Tracing White balance 29

B

backlight 18
backup battery 138
Battery Alarm 104
Battery Charger 16
Battery INFO 104
Battery Pack 16
Battery/Media Status Screen 80
Black 49
Black Gamma 49
built-in speaker 71
built-in stereo microphones 34
Button/Remote Status Screen 80

C

Camera Data 101
CAMERA SET Menu 84
CAMERA Status Screen 78
Charge Count 80
Clip 27, 70, 106, 112
Clip Cont. Rec 39, 87
Clip Name Disp 108
Clip name 27
Clip Operation menu 71
Clock 18
Clock Set 101
CMOS Image Sensors 120
Color Bars 85
Color Correction 45
Color Detection 49
Copy 49
Copy All 107
Country 105
Cueing up 71

D

DC IN connector 17
DC IN Power 17
delete shot marks 77
Deleting Clips 50
Depth-of-Field indication 14
Detail 46
Direct Menu 15, 104
DISP CLIP INFO 73
Display On/Off 97
Down Converter 94
DURATION/TC/U-BIT button 34

E

Electronic Shutter 31
Electronic Viewfinder 18
Entering a character string 83
Error Indications 141
EVF 18, 96
EX SLS 31
EXPAND (COARSE) 76
EXPAND (FINE) 76
EXPAND CLIP Screen 72, 75

Exposure 31
ExpressCard slot 112
External Input Signals 115
External Monitors 111
External Synchronization 116
eyepiece focusing knob 19

F

F.Sys. 105
Fan Control 109
Flange focal length 41
Flicker Reduce 33, 85
Flickers 33
Focus 32
FOCUS MAG button 32
Format 23, 105
Format Media 107
Frame Recording 38, 86
FULL AUTO button 26
Full Auto mode 26
Full MF mode 32

G

Gain 30
Gain Setup 84
Gamma 48
Genlock 104
GENLOCK IN connector 116

H

handle ZOOM button 32
HD Detail 46
HD/SD 105
HDMI OUT connector 111
headphone connector 35
Histogram indication 14
Hours Meter 104

I

i.LINK 13, 114
i.LINK connector 112
Image Alignment 41
Image Inversion 90
Input Source Select 93
Interval Recording 37, 86
IR Remote 12, 104

J

Jog dial 82

K

Knee 48
KP Flag 36

L

Language 102
LCD 18, 96
LCD/VF SET Menu 96
Lens hood 7
LENS REMOTE connector 32
Limitations of Inputs/Outputs 133
Low Key SAT 49

M

Macro mode 33
Marker 30, 97
Matrix 44
MEAD-SD01 23
Media Adaptor 23
Media Full 22
Media Near Full 22
Memory A mode 29
Memory B mode 29
MENU button 82
Menu Scroll 110
MF Assist 85
microphone holder 34
Monitoring audio 35
Multi Matrix 45

N

Network 109
NG Flag 36
Nonlinear Editing 115

O

OK Flag 36
OK Mark 36
OK-Clip thumbnail screen 69
OTHERS Menu 101
Output Signal 125

P

P.Cache Rec 87
PAUSE 76, 77
Peaking 32, 96
Picture Cache Recording 39
Picture Profiles 42
Plan.Metadata 51, 108
Planning metadata 51
PLAY/PAUSE button 70
Power Zoom 32
PP Data 49
Preset mode 29
Preventing switching errors 27
Profile Name 44
Proxy File 109

R

REC HOLD lever 27
Rec Review 37, 89
REC REVIEW button 27
REC START/STOP button 27
Recording audio signals 34
recording start mark 39, 72
Reference Tone 36
Reset 49

S

S&Q Motion 41, 87
SD Detail 47
SDHC Cards 23
SDI OUT connector 111
SDI Rec Control 95, 111
SDI/HDMI/i.LINK I/O Select 93
SEL/SET buttons 82
SEL/SET dial 82
Setting Data 50
Setup Menus 81, 84
Shockless White 89
SHOT MARK 36, 72
SHOT MARK Screen 72, 76
shot marks 36, 71, 77
Shutter 84
Skin Tone Detail 47
SLOT SELECT button 69
Slow & Quick Motion 40
SLS/EX SLS 85
Status Screens 78
Steady Shot 33
SxS Device Driver Software 112
SxS Memory Cards 20
System 105

T

Tally 103
TC Format 100
TC IN connector 117
TC Out 118
TC OUT connector 118
TC/UB SET Menu 99
THUMBNAIL button 69
Thumbnail Screens 68, 71
time and date 18
Time Data 34
Time Zone 18, 101
Timecode 34, 99, 116
TLCS 26, 89
Trigger Mode 104, 114

U

USB cable 112
USB Flash Drives 24
USB wireless LAN module 55
Users Bit 34, 99
UTC 18

V

Version 109
Version Up 110
Video Formats 28
VIDEO OUT connector 111
VIDEO SET Menu 93
Video Status Screen 79
Viewfinder 18
VOLUME buttons 71

W

Warning Indications 141
White 46
WHITE BAL button 30
WHITE BAL switch 29
White Balance 29
White Switch <B> 89
Wi-Fi remote commander 61

X

XAVC/MPEG2 105
XQD Memory Cards 23

Z

Zebra 30, 97
zebra pattern 30
Zoom 32, 86
Zoom Speed 32, 86
Zoom Transition 86

http://www.sony.net/